NPL
National Physical Laboratory

Metrology for performance analysis of THz devices and systems – Impact of lack of standards

Mira Naftaly
mira.naftaly@npl.co.uk

National Physical Laboratory

The UK's National Measurement Institute (NMI)

- Founded in 1900
- 400+ Scientists
- State-of-the-art facilities

- **Focus on metrology**
- Fundamental research
- Applied science
- Support for industry

THz measurement needs:

Device	Measurement	Availability
Emitters	**Center frequency and linewidth** **Broadband spectral profile** **Power** **Beam profile**	**YES** **YES** **Limited** **NO**
Detectors	**Spectral responsivity** **Spectral NEP**	**Limited** **NO**
Systems: THz TDS	**System specifications**	**NO**

THz frequency measurement

NPL National Physical Laboratory

Need:

- **Centre frequency & linewidth**
  - Carrier frequency
  - Frequency stability/jitter
  - High resolution spectroscopy

Need:

- **Broadband spectral profile**
  - THz Spectroscopy
  - Broad features in narrow-line sources

THz frequency measurement

NPL National Physical Laboratory

THz frequency

is the only parameter in THz measurements where traceable calibration and standards exist and are widely used

Frequency measurement of electronic THz emitters: heterodyne

Heterodyne:

- The most common technique
- The most accurate
- The most precise
- Can be traceable

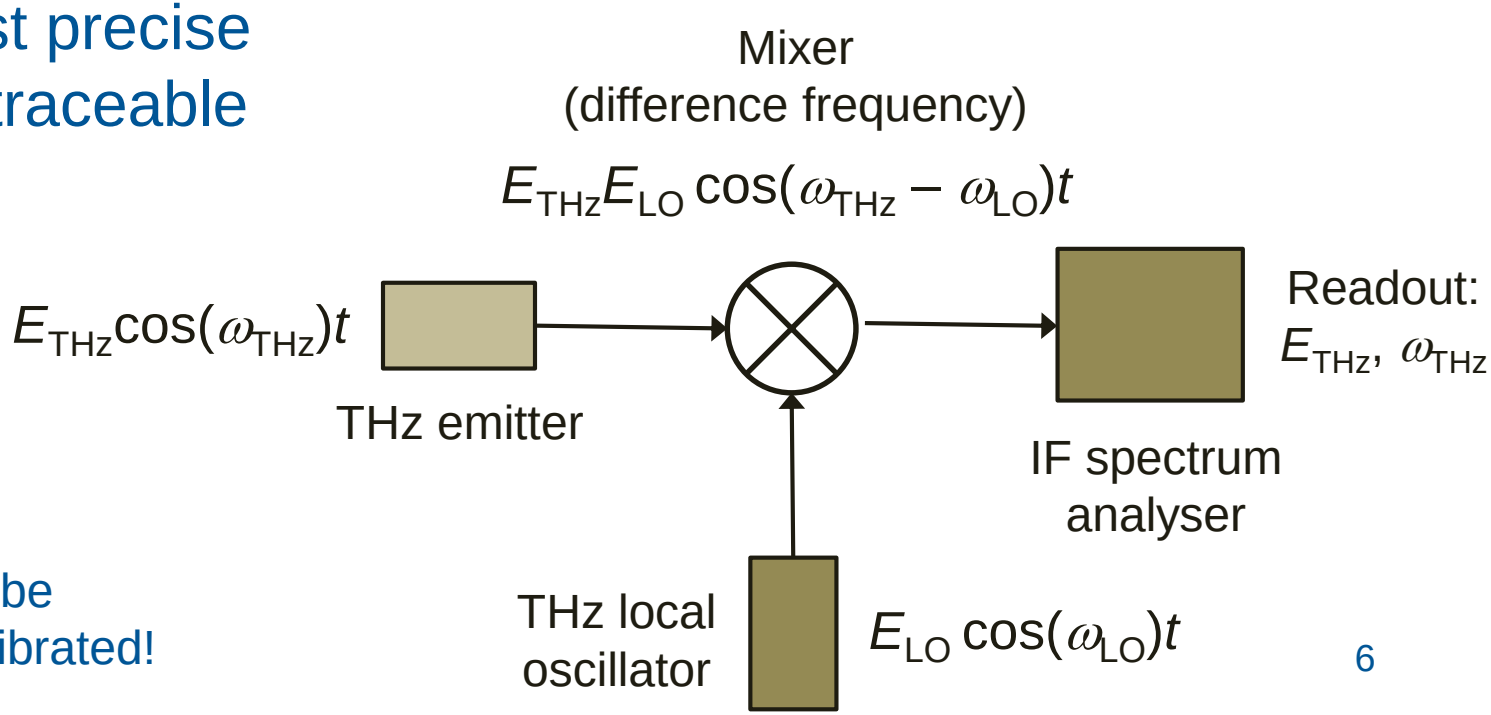

Note:
The LO must be frequency-calibrated!

THz spectrum analyser: state of the art (example)

Maximum frequency:	50 GHz
with mixers:	up to 1.1 THz
Sweep bandwidth:	1 GHz
Amplitude accuracy:	0.2 dB
Frequency accuracy:	10^{-7}
e.g.:	±50 kHz @ 500 GHz

Keysight X-series

Excellent for measuring central frequency & linewidth for narrow-line cw sources up to ~1 THz.

Limitations:

- Limited top frequency
- Waveguide coupling / multiple waveguides needed

THz frequency measurement at frequencies > 1 THz

Frequency calibration using absorption lines in gases

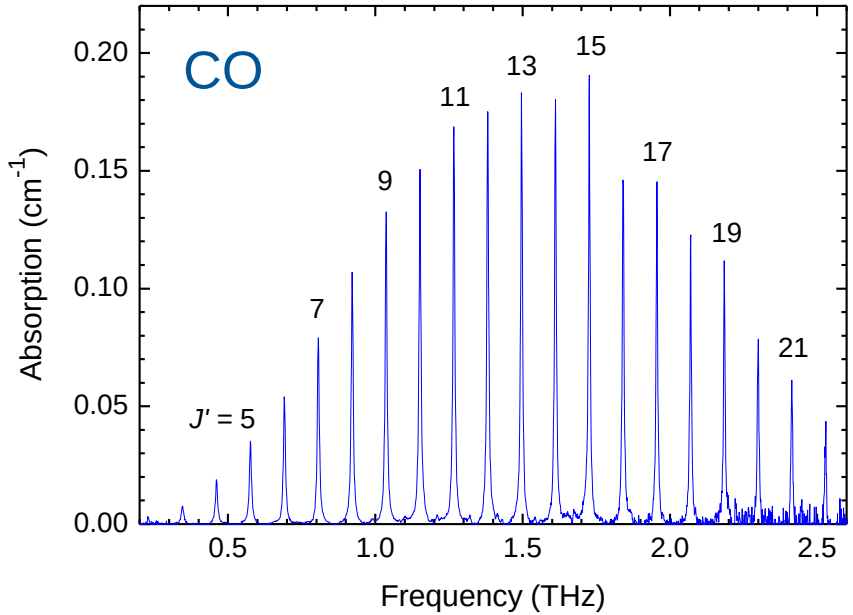

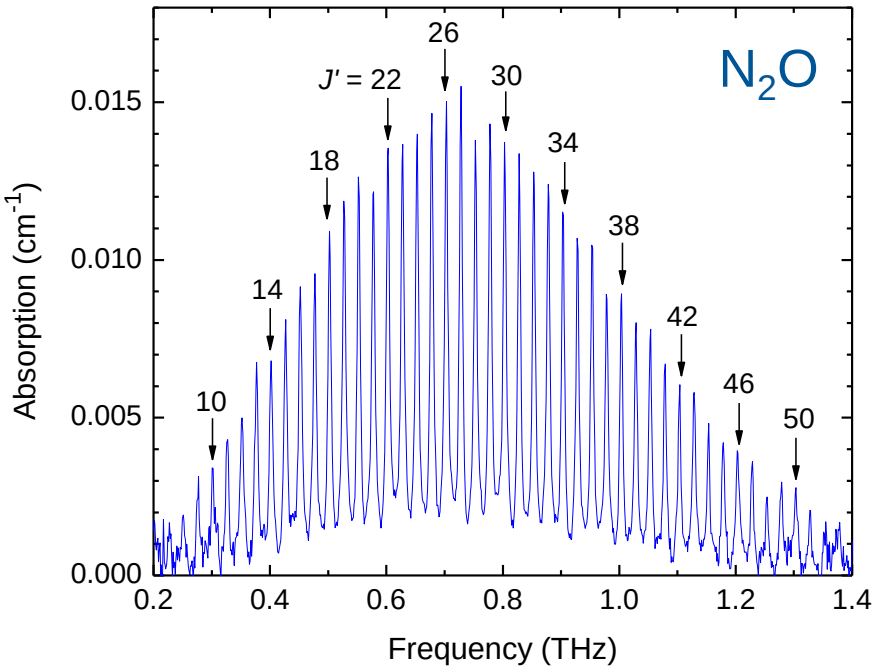

Frequencies of gas lines are known with high accuracy: http://hitran.org/

THz frequency measurement at frequencies > 1 THz

Frequency combs

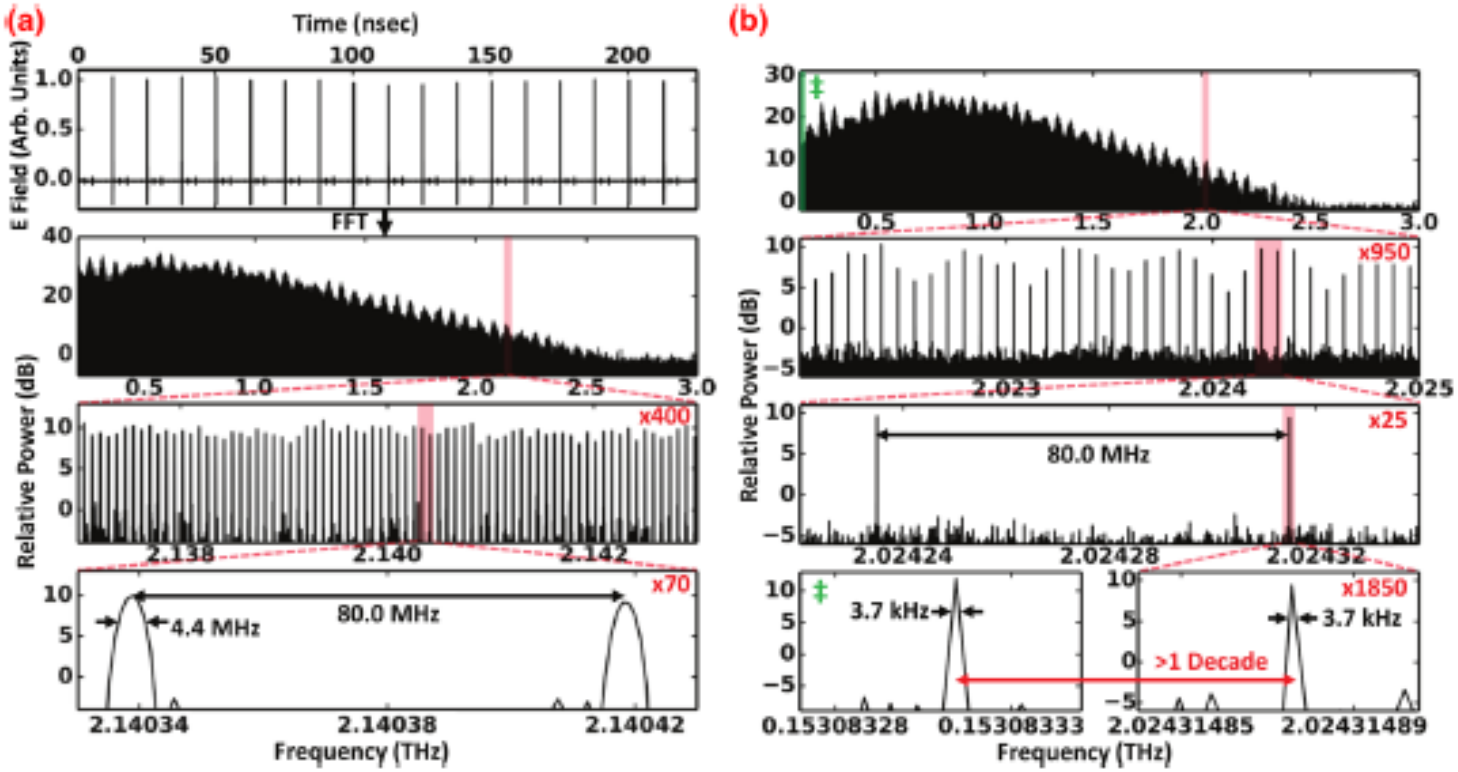

Finneran et al, Phys Rev Lett 114, 163902 (2015)

THz spectral profile measurement: broadband & free-space

Lamellar interferometer

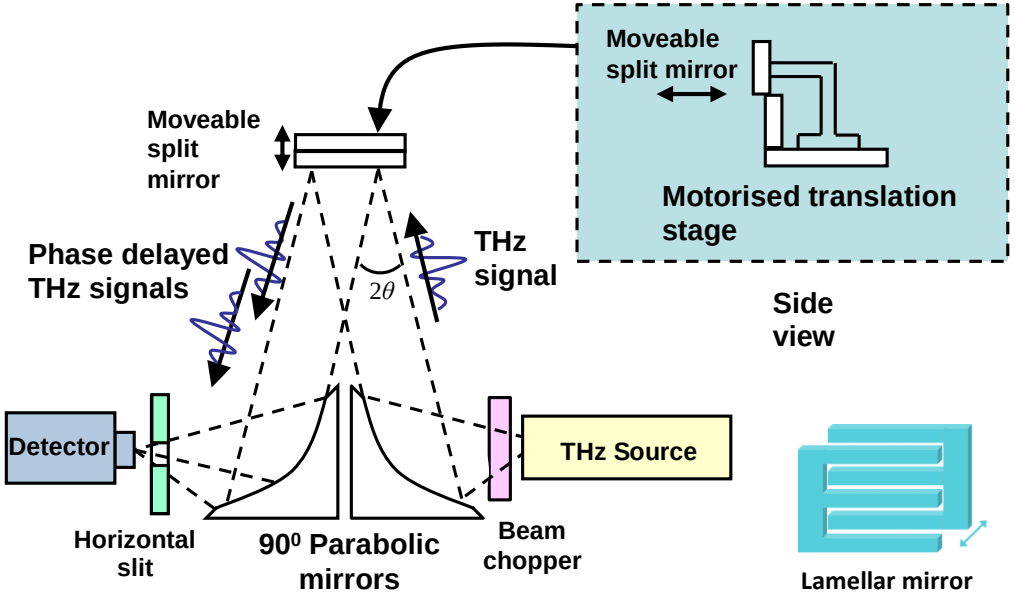

The lamellar mirror acts as both beam-splitter and moveable mirror.

Advantages:

- Large bandwidth: $f_{max}/f_{min} = N_{fingers}$
- With suitable detector, bandwidth up to 10 THz.
- Detects higher harmonics.
- Measures spectral emission profile.
- Is suitable for free-space sources.
- With a known source can measure spectral responsivity of detectors.

Disadvantages:

- Requires frequency & linearity calibration.
- Low frequency resolution (>1 GHz).

THz power measurement

Need:

- **Power**
  - Emitter performance
  - Link power budget
  - Health & safety
- **Antenna characterization**
- **Broadband spectral profile**
- **Polarization**
- **Beam profile**

THz power measurement

NPL National Physical Laboratory

Main types of THz power meters

Detector	Traceability	Commercial availability	Ease of use
Radiometer	Traceable to a black body	X	X
Calorimeter	Traceable to a black body	V	V
Pyroelectric detector	Calibrated against traceable detector	V	V
Thermopile	Calibrated against traceable detector	V	V
Acousto-optic (Golay cell)	Drifts, nonlinear response	V	V
Cryogenic bolometer	Not calibrated	V	X

THz calorimeter – de facto industry standard

Waveguide-coupled
Frequency range: 75 GHz to >3 THz
Input power range: 1 µW – 0.2 W
Calibrated

Typical PM5 Performance		
Scale	**90% Response Time***	**RMS Noise**
200 mW	0.15 sec	~0.02 µW
20 mW	0.2 sec	~0.08 µW
2 mW	0.6 sec	0.03 µW
200 µW	12 sec	0.003 µW

*Response time is given as the time from the application of an input to a response at the analog output of 90% of the final reading.

VDI – Erickson PM5

http://vadiodes.com/en/products/power-meters-erickson
Erickson, 13th Int. Symp. Space THz Tech., Harvard Uni. 2002.

Isothermal calorimeter: has two identical radiation inputs; radiation is coupled into one, while the other is electrically heated to equal temperature. The electrical power is then equal to the absorbed radiation power.

Unsuitable for free-space measurements

THz pyroelectric detector

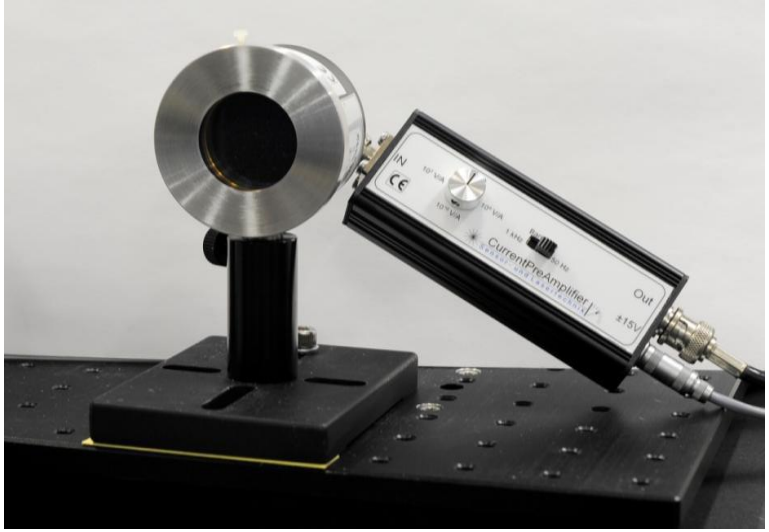

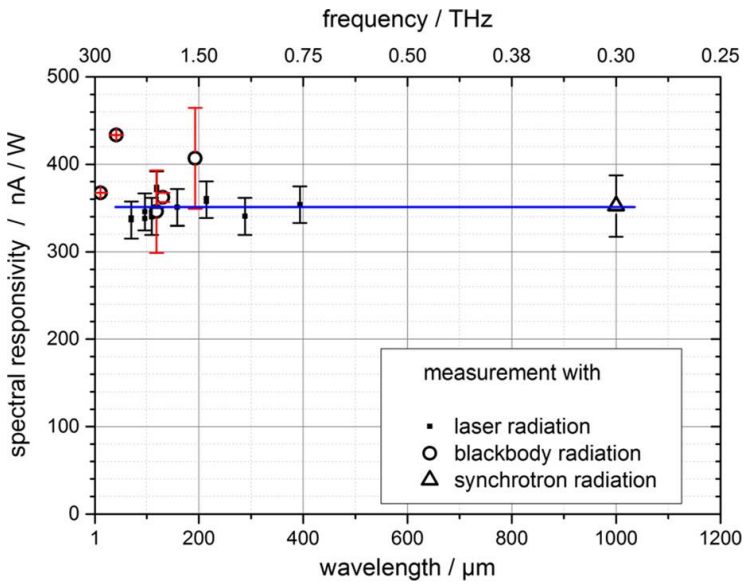

Spectrally flat responsivity

Thin-film pyroelectric THz detector developed by Physikalisch-Technische Bundesanstalt (PTB) and Sensor und Lasertechnik (SLT), Germany.

Maximum optical responsivity (amplified): **10^4 V/W**

Pyroelectric material: 10 µm thick PVDF polymer foil.
Absorber: Thin metallic layer on both sides of the foil.

Pyroelectric sensor: pyroelectric material absorbs radiation, raising its temperature, which changes its permanent electric dipole moment. This can be monitored as current or voltage.

Golay cell

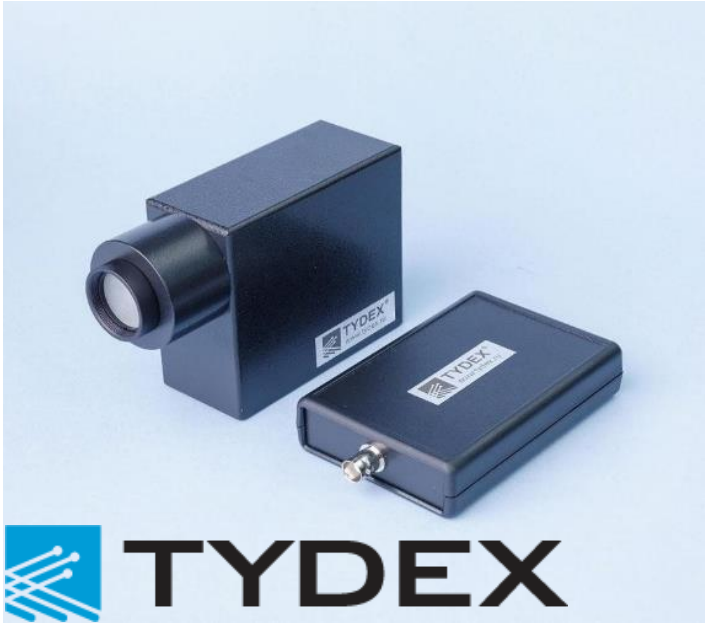

A Golay detector made by Tydex
http://www.tydexoptics.com/products/thz_devices/golay_cell/

Golay cell: a type of acousto-optic sensor. Radiation is absorbed by a thin metal layer, which heats the gas in a cell and raises its pressure. The cell has a flexible mirror wall whose deformation is optically detected as signal.

Has the highest sensitivity of all room-temperature THz detectors.

Optical responsivity:	**10^5 V/W**
Maximum incident power:	10 µW
NEP @ 15 Hz:	10^{-10} W/Hz$^{1/2}$

Other THz power detectors

Radiometer: measures absorbed radiation power in comparison with a traceably calibrated optical source (black body or laser).

Thermopile: a series array of thermocouples using the thermoelectric (Peltier) effect to convert a thermal gradient created by absorbed radiation into an electrical signal.

Cryogenic bolometers: use free-carrier absorption by electrons in a doped semiconductor. Come in many different designs and materials. *Have by far the highest sensitivity of all THz detectors.*

For all THz detectors:
the frequency range and spectral flatness of responsivity depend on the absorption properties of the radiation absorber.

THz power standards?

Agreed standards do not exist:

- THz power source standards
- THz power measurement standards

PTB provides a limited-availability traceable calibration service for THz power meters.

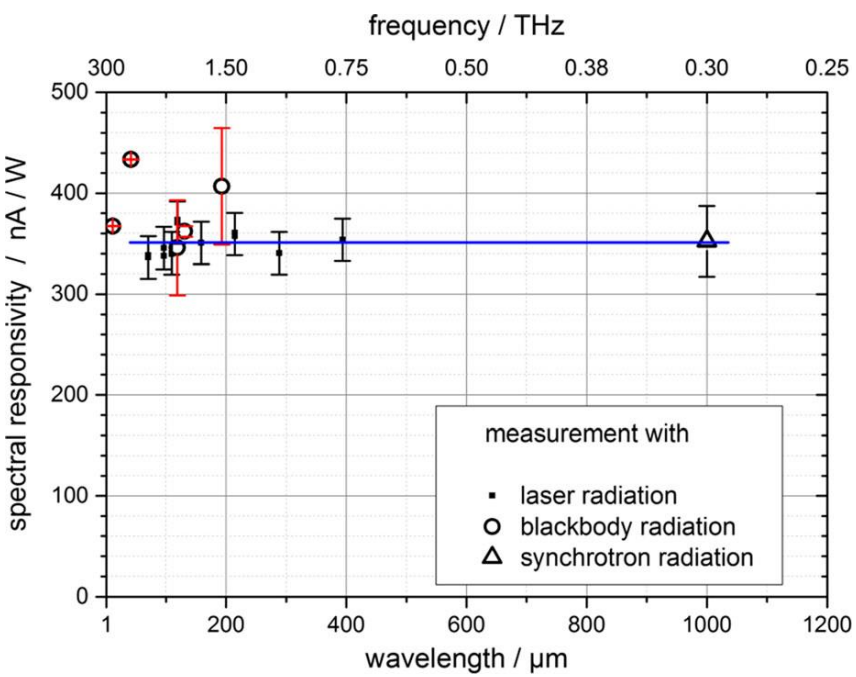

e.g.
Gutschwager et al, Metrologia 46 (2009) S165–S169
Steiger et al, IEEE Trans THz Sci Tech 6 (2016) 664-669
Muller et al, J Infrared Milli Terahz Waves (2015) 36:654–661
Muller et al, J Infrared Milli Terahz Waves (2014) 35:659–670

THz emitter beam profile

NPL National Physical Laboratory

There are no facilities or instruments for calibrated measurements of THz beam profile.
(Nothing similar to antenna ranges for RF.)

Need:

- Beam spread
- Lobes and/or other features
- Collimation & focusing optics
- Fraction of power in the central spot
- Phase variations

THz cameras

TeraSense Tera-256
- 256 pixels (16 x 16 array)
- 1.5 mm pixel pitch
- NEP = 1 nW/√Hz
- 10 cm x 10 cm x 5.5 cm device size

http://terasense.com/products/sub-thz-imaging-cameras/

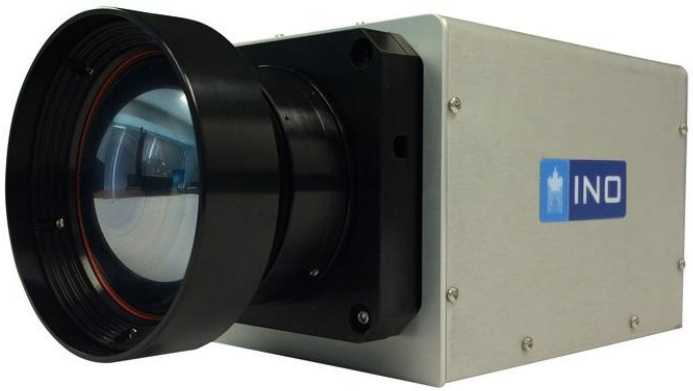

INO-IRXCAM-384THZ TERAHERTZ CAMERA
- 384 x 288 pixels uncooledmicrobolometerFPA
- 35 µm pixel pitch
- 4.25–0.094THz
- 61 mm (H) x61 mm (W)x 65mm (L)

https://www.ino.ca/media/293788/comm-16012-terahertz-microxcam-camera-384-x-288.pdf

Issues:
- Responsivity calibration uncertain
- Frequency dependent responsivity
- Requires input optics

THz systems

THz time domain spectrometer – the most widely used THz system

System specification requirements:

- Operating bandwidth
- Dynamic range
- Noise floor
- Frequency resolution

No agreed definitions exist

THz THz specifications

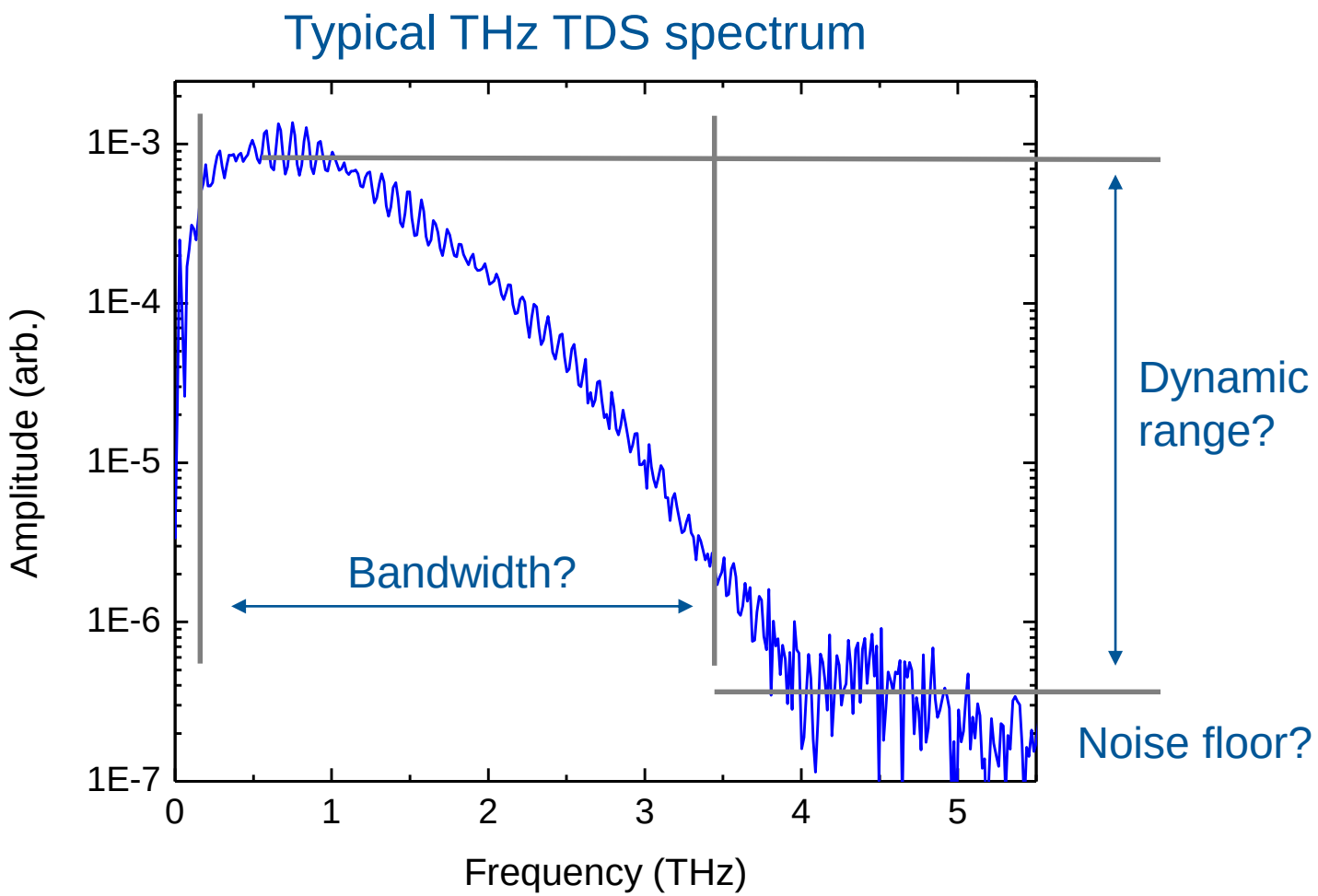

Frequency resolution = data point spacing?

Conclusion

There is an urgent need for industry standards:

- THz power measurement
- Device and system specification
- Beam imaging

Industry standards – especially for THz communications – are necessary for widespread adoption of THz technologies.

National Physical Laboratory

Thank you