HORIZON 2020	Deliverable ID: D7.6	Preparation date: 03 April 2019
	Milestone: Intermediate	
	Title: **Interim Standardisation Report**	
Terahertz based Ultra High Bandwidth Wireless Access Networks	Editor/Lead beneficiary (name/partner): Thomas Kürner / TU Braunschweig	
	Internally reviewed by (name/partner): Alan Davy/WIT	
	Approved by: PSC	

Dissemination level		
PU	Public	X

Revisions				
Version	**Date**	**Author**	**Organisation**	**Details**
0.1	26.2.19	Thomas Kürner	TUBS	First draft
0.2	28.02.19	Alan Davy	WIT	Reviewed

The research leading to these results has received funding from the EU H2020 under grant agreement n° 761579.

Table of contents

Table of contents iii
Executive summary 1
1 Introduction 3
1.1 Summary 3
1.2 Structure of this document 3
1.3 Relationships with other deliverables 3
1.4 Contributors 3
1.5 Acronyms and abbreviations 3
1.6 Change log 3
2 Review of Terapod's Strategy on Standardisation and Regulation 5
2.1 Status at IEEE 802 wrt THz Communications 5
2.2 Status wrt WRC 2019 5
2.3 New Document on Recommended Practice on Device Measurements 5
3 Standardisation in IEEE 802 6
4 Conclusion/Further work 7
References 8
Appendix A: Contributions from TERAPOD to IEEE 802.15 in M7-M18 9

Executive summary

This deliverable provides an overview on TERAPOD's activities in standardisation and regulation, which have been identified in D7.5 (Initial Standardisation Impact Strategy). The two main bodies, which have been identified so far are IEEE 802 and the World Radio Conference 2019 (WRC 2019). In the first 18 months of the project TERAPOD focussed on contributions to the IEEE 802.15 Technical Advisory Group THz (IEEE 802.15 TSG THz). In the long term this group may spin-off an activity to amend Std. IEEE 802.15.3d™-2017 on which TERAPODS current activities are build on. A second activity are related to regulatory issues wrt WRC 2019. The current discussion wrt spectrum are mainly driven by outdoor applications like backhaul/fronthaul links. Hence, potential technical input from TERAPOD on the data centre use case are not relevant. However the outcome of WRC 2019 may have an impact on the potential use of spectrum also for the applications considered in TERAPOD. TERAPOD is observing these developments and may take into consideration the outcome of WRC 2019 in its third project year. In addition to the relations to these two standardisation bodies TERAPOD has identified the necessity to develop a standard in the area of device measurements and intends to produce a best practice document in this area. The main contributions in this area are foreseen in the second half of the project duration.

1 Introduction

1.1 Summary

This deliverable provides a report on the progress on standardisation activities, which have been identified in deliverable D7.5 Initial Standardisation Impact Strategy (Kürner, Naftaly, & Rey, TERAPOD Deliverable D 7.5 Initial Standardisation Impact Strategy, 2017). The two main bodies, which have been identified in D7.5 are IEEE 802 and the World Radio Conference 2019 (WRC 2019). In addition to these two standardisation bodies TERAPOD has identified the necessity to develop a standard in the area of device measurements and intends to produce a best practice document in this area.

1.2 Structure of this document

This document first reviews TERAPOD's strategy on of standardisation and regulation in chapter 2 followed by a descriptions of TERAPOD's contributions to IEEE 802 in Chapter 3.

1.3 Relationships with other deliverables

This document builds on deliverable D7.5 Initial Standardisation Impact Strategy (Kürner, Naftaly, & Rey, TERAPOD Deliverable D 7.5 Initial Standardisation Impact Strategy, 2017).

1.4 Contributors

The following partners have contributed to this deliverable:

- Thomas Kürner (TU Braunschweig)
- Mira Naftaly (NPL)

1.5 Acronyms and abbreviations

AI	Agenda Item
CEPT	Conférence Européenne des Administrations des Postes et des Télécommunications
IEEE	Institute of Electrical and Electronics Engineers
ITU-R	International Telecommunication Union, Radiocommunications Sector
WG	Working Group
WRC	World Radio Conference

1.6 Change log

No change log entries.

2 Review of Terapod's Strategy on Standardisation and Regulation

In D7.5 Initial Standardisation Impact Strategy (Kürner, Naftaly, & Rey, TERAPOD Deliverable D 7.5 Initial Standardisation Impact Strategy, 2017). three relevant areas have been identified, which are briefly described in this chapter.

2.1 Status at IEEE 802 wrt THz Communications

On 12 October 2017 a first standard for frequencies in the bands 252 to 275 GHz has been published, which was created within IEEE 802 WG15 since 2014. The corresponding Task Group has been led by Thomas Kürner from TERAPOD partner TUBS, who also chairs the IEEE 802.15 Technical Advisory Group THz (Formerly Interest Group THz). On 12 October 2017 a first standard for frequencies in the bands 252 to 275 GHz has been published as Standard IEEE 802.15.3d™-2017 (IEEE, 2017b), which is an amendment to IEEE 802.15.3™-2016 (IEEE, 2016a). TERAPOD builds on Standard IEEE 802.15.3d™-2017 and the standard is currently implemented in physical layer simulation used in the project.

In order to enable bridging in data centers for IEEE 802.15.3 standards the small project IEEE P802.1Acct on proper interface definitions (IEEE, 2017c) has been defined as a joint activity of IEEE 802 WGs 1 and 15 to amend IEEE Std. 802.1AC wrt the definitions required to bridge the LANs with the IEEE Std. 802.15.3™-2016. The work for the project is straightforward and the amendment is expected to ready at the end of 2018. There is no need for TERPAOD to feed any input to the process. However, the output will be essential to deploy wireless links in data centres and is therefore essential for TERAPOD.

2.2 Status wrt WRC 2019

At the upcoming WRC 2019 the frequency band between 275 GHz and 450 GHz is considered by a specific agenda item AI 1.15 (ITU, 2015). This agenda item is to identify spectrum allocation between 275 and 450 GHz for THz communication . Sharing studies with passive services are a key investigating area. TUBS is coordinating this AI at national (Germany) and CEPT level. The current discussion wrt spectrum are mainly driven by outdoor applications like backhaul/fronthaul links and are actively considered by the parallel running Horizon 2020 project ThoR (Rey, 2018). Hence, potential technical input from TERAPOD on the data centre use case are not relevant. However the outcome of WRC 2019 may have an impact on the potential use of spectrum also for the applications considered in TERAPOD. TERAPOD is observing these developments and may take into consideration the outcome of WRC 2019 in its third project year.

2.3 New Document on Recommended Practice on Device Measurements

In recent years, terahertz metrology has been attracting increasing attention, focusing primarily on calibration of time-domain spectrometers and on methodologies for parameter. In contrast, little consideration has been given to techniques for characterising and specifying other types of THz devices, and in particular devices for THz communications. It is widely recognised that industrial-scale implementation of THz wireless links will necessarily require device standardisation, adoption of commonly agreed specification criteria, and provision of calibration services. As a preparatory step, it is urgently advisable to develop an agreed "recommended practice on device measurements for THz communications". TERAPOD will prepare such a document in the second half of its project life time.

3 Standardisation in IEEE 802

TERAPOD regularly reports its progress to the IEEE 802.15 TAG THz. In M7 to M18 TERAPOD has provided input to this group in three contributions:

- Introduction to the H2020 ICT-09-2017 Cluster (Kürner & al, Introduction to the H2020 ICT-09-2017 Cluster, 2018) Warsaw, 7 May 2018:

  Six projects from the H2020 call ICT-09-2017 (DREAM, EPIC, TERAPOD, TERRANOVA, ULTRAWAVE, WORTECS) have agreed to form an unofficial cluster in order to try to coordinate some dissemination activities to maximise the impact of the projects. This contribution provides some basic information on this cluster and the six projects.
- THz Communications –An Overview and Options for IEEE 802 Standardization (Kürner & al, THz Communications –An Overview and Options for IEEE 802 Standardization, 2018) , Bangkok, 12 November 2018:

  Over the last couple of years in particular, THz communications, i. e. the frequency range beyond 275 GHz, has become an attractive new research area for commercial development. It has reached a level of maturity that a couple of projects are now underway to develop technological solutions enabling the set-up of hardware demonstrators. This tutorial presented to the while group of IEEE 802 provides a brief overview on the current status of THz Communication systems focusing on ongoing research activities such as the European Horizon 2020 framework, and provide an overview of the ongoing WRC 2019 preparations, as well as discussing the potential for IEEE 802 to play a major role in this interesting frequency range.
- 300 GHz Channel Measurements in a Real Data Center -First Results (Eckhardt, Doeker, & Kürner, 2018) , Bangkok, 14 November 2018:

  This document presents first results form a 300 GHz channel measurement campaign carried out in real data centre within the EU Horizon 2020 project TERAPOD.

4 Conclusion/Further work

TERAPOD in the reporting period M7-M18 TERAPOD has made three contributions to IEEE 802.15 TAG THz and is observing the current development on spectrum regulations at WRC 2019. In the second half of the project TERAPOD's activities will be threefold:

1. TERAPOD will continue to actively contribute to IEEE 802.15 TAG THz and will feedback its experience with the IEEE Std. 802.15.3d2017 standard in simulating its applications in a data centre environment
2. TERAPOD will analyse the outcome of WRC 2019 and implement possible changes yielding form the new spectrum allocation.
3. TERAPOD will produce A new document on "Recommended Practice on Device Measurements"

References

Eckhardt, J., Doeker, T., & Kürner, T. (2018). *300 GHz Channel Measurements in a Real Data Center -First Results.* Bangkok: IEEE 802 Plenary; https://mentor.ieee.org/802.15/dcn/18/15-18-0519-00-0thz-300ghz-channel-measurements-in-a-real-data-center-first-results.pdf.

IEEE. (2016a). *Std IEEE 802.15.3-2016: IEEE Standard for High Data Rate Wireless Multi-Media Networks.*

IEEE. (2017b). *Std IEEE 802.15.3d-2017: IEEE Standard for High Data Rate Wireless Multi-Media Networks; Amendment 2: 100 Gb/s Wireless Switched Point-to-Point Physical Layer.*

IEEE. (2017c). *Project Authorization Reqeust (PAR): 802.1ACct - Amendment: Support for IEEE Std 802.15.3.*

ITU. (2015). *Final Acts WRC-15, World Radiocommunication Conference.* https://www.itu.int/pub/R-ACT-WRC.12-2015/en.

Kürner, T., & al, e. (2018). *Introduction to the H2020 ICT-09-2017 Cluster.* Warsaw: IEEE 802 Wireless Interim Meeting;https://mentor.ieee.org/802.15/dcn/18/15-18-0177-01-0thz-introduction-to-the-h2020-ict-09-2017-cluster.pdf.

Kürner, T., & al, e. (2018). *THz Communications –An Overview and Options for IEEE 802 Standardization.* Bangkok: IEEE 802 Wireless Plenary; https://mentor.ieee.org/802.15/dcn/18/15-18-0516-02-0thz-tutorial-thz-communications-an-overview-and-options-for-ieee-802-standardization.pdf.

Kürner, T., Naftaly, M., & Rey, S. (2017). *TERAPOD Deliverable D 7.5 Initial Standardisation Impact Strategy.*

Rey, S. (2018). *ThoR Deliverable D5.1 Initial Results on Sharing Studies.* https://thorproject.eu/wp-content/uploads/2018/12/ThoR-D5.1-Initial-results-on-sharing-studies_NOT-YET-APPROVED.pdf.

Appendix A: Contributions from TERAPOD to IEEE 802.15 in M7-M18

Project: IEEE P802.15 Working Group for Wireless Speciality Networks (WSNs)

Submission Title: Introduction to the H2020 ICT-09-2017 Cluster

Date Submitted: 7 May 2018

Source: Thomas Kürner TU Braunschweig
Address Schleinitzstr. 22, D-38092 Braunschweig, Germany
Voice:+495313912416, FAX: +495313915192, E-Mail: t.kuerner@tu-bs.de

Re: n/a

Abstract: Six projects from the H2020 call ICT-09-2017 (DREAM, EPIC, TERAPOD, TERRANOVA, ULTRAWAVE, WORTECS) have agreed to form an unofficial cluster in order to try to coordinate some dissemination activities to maximise the impact of the projects. This contribution provides some basic information in this cluster and the six projects.

Purpose: Information of the IG THz

Notice: This document has been prepared to assist the IEEE P802.15. It is offered as a basis for discussion and is not binding on the contributing individual(s) or organization(s). The material in this document is subject to change in form and content after further study. The contributor(s) reserve(s) the right to add, amend or withdraw material contained herein.

Release: The contributor acknowledges and accepts that this contribution becomes the property of IEEE and may be made publicly available by P802.15.

Introduction to the H2020 ICT-09-2017 Cluster

Contributors:
Thomas Kürner Technische Universität Braunschweig, Germany
Alan Davy, TSSG, Waterford Institute of Technology, Ireland
Valdimir Ermolov, VTT, Finland
Mir Goraishi, pureLiFi, UK
Bruce Napier, Vivid Components, UK
Claudio Paoloni, Lancaster University, UK
Onur Sahin, InterDigital Europe, UK
Colja Schubert, Fraunhofer HHI, Germany

The research in this cluster is carried out within the projects DREAM, EPIC, TERAPOD, TERRANOVA, ULTRAWAVE and WORTECS supported by the EU Framework Programme for Research and Innovation Horizon 2020

The Horizon 2020 ICT-Call-09-2017 on Networking Research beyond 5G (1/3)

Specific Challenge:

- While 5G networks has an established roadmap towards technology validation, specifications and tests by industry, outstanding **new scientific opportunities are blooming in the field of networking research, with the objective of bringing little explored technologies and system concepts closer to exploitation**. The challenge is to support European scientific excellence notably in the DSP domain, and to bring the most promising long term research coming from the labs closer to fruition. This includes perspectives for the full exploitation of the **spectrum potential, notably above 90Ghz**, with new waves of technologies and knowledge, **bringing wireless systems to the speed of optical technologies**, and for new applications. It includes **interaction with photonic systems** as well as new cooperation networking and protocols, notably in the mobility context.
- **Development and exploitation of academic research through transfer** and innovation towards industry with a **particular focus on SMEs** is an integral part of the challenge.

The Horizon 2020 ICT-Call-09-2017 on Networking Research beyond 5G (2/3)

Scope:

- **Research and Innovation Actions**. Proposals may cover one or more of the themes identified below:
  - **- Scientific and technology advances** for novel use of the spectrum potential, de-risking technological building blocks at frequencies above 90 GHz up to THz communications backed by innovative usage scenarios, address visible light communications and develop radically new approaches for spectrum efficiency.
  - **- Advanced signal processing**, antenna processing, information theory and coding to optimize and reach **Tbit/s** in wireless communications.
  - **- Demand-attentive and cooperation networking** alternative to 5G architectures, including HetNets, opportunistic networks novel architectures and protocols for routing, latency and caching in complex networks notably for mobility.

The Horizon 2020 ICT-Call-09-2017 on Networking Research beyond 5G (3/3)

Expected Impact:

- - Validation of disruptive communication concepts, technologies and architectures;
- - Proof of applicability of challenging spectrum regions towards innovative and cost efficient applications;
- - Advances in signal processing and information theory and scientific publication in world class journals;
- - Industry competitiveness with exploitation of academic research through transfer and innovation towards industry, in particular SMEs or start ups.

Some Background on the H2020-ICT-09-2017-Cluster

- Six projects from the H2020 call ICT-09-2017 have been funded:
  - DREAM
  - EPIC
  - TERAPOD
  - TERRANOVA
  - ULTRAWAVE
  - WORTECS

- These six projects have agreed to form an unofficial cluster in order to try to coordinate some dissemination activities to maximise the impact of the projects.
- This contribution provides some basic information on these six projects.

DREAM (1/2)

- Project Title: D-band Radio solution Enabling up to 100Gb/s reconfigurable Approach for Meshed beyond 5G network
- Project Duration: September 2017 – August 2020
- Project Goals:
  - The H2020 DREAM project is aimed at exploitation of the D-band (130-174.8 GHz) spectrum, with beam steering functionality, to enable wireless links with data rate exceeding current backhaul solutions by at least x 10, thus bringing wireless systems to the speed of optical systems.
- Webpage: www.h2020-dream.eu

DREAM (2/2)

- Project Partners:

- Project Coordinator: Dr. Vladimir Ermolov, vladimir.ermoloc@vtt.fi

EPIC (1/2)

- Project Title: Enabling Practical Wireless Tb/s Communications with Next Generation Channel Coding

- Project Duration: September 2017 – August 2020

- Project Goals:
  - Design and implementation of **next generation Forward-Error-Correction** for wireless Tb/s technology and **Beyond-5G systems**
  - Advancement of **state-of-the-art channel codes** and **channel coding technology** for wireless Tb/s technology
  - **Holistic design approach** that considers code design, decoding algorithms and efficient implementation on advanced silicon technologies in a cross-layer approach
  - Validation and demonstration of new FEC technology and corresponding implementations as **virtual silicon tape-out** using realistic use cases
  - Provide **scientific excellence and contributions** to wireless industry in the domain of B5G standardization and technology development

EPIC (2/2)

- Project Partners:
  - Technikon (Austria)
  - InterDigital Europe (UK)
  - IMEC (Belgium)
  - Polaran (Turkey)
  - Technische Universitat Kaiserslautern (Germany)
  - Ericsson AB (Sweden)
  - IMT Atlantique (France)
  - Creonic GMBH (Germany)

TERAPOD (1/2)

- Project Title: Terahertz based Ultra High Bandwidth Wireless Access Networks
- Project Duration: September 2017 – August 2020
- Project Goals:
  - to investigate and demonstrate the feasibility of ultra high bandwidth wireless access networks operating in the Terahertz band.
  - The project will focus on end to end *demonstration of the THz wireless link within a Data Centre Proof of Concept deployment*, while also investigating other use cases applicable to beyond 5G
  - The project seeks to bring THz communication a leap closer to industry uptake through leveraging recent advances in THz components, a thorough measurement and characterization study of components and devices, coupled with specification and validation of higher layer communication protocol specification.
- Web Page: www.terapod-project.eu

TERAPOD (2/2)

- Project Partners:
  - WATERFORD INSTITUTE OF TECHNOLOGY (Ireland)
  - UNIVERSITY COLLEGE LONDON (United Kingdom)
  - UNIVERSITY OF GLASGOW (United Kingdom
  - TECHNISCHE UNIVERSITAET BRAUNSCHWEIG (Germany)
  - NPL MANAGEMENT LIMITED (United Kingdom)
  - EMC INFORMATION SYSTEMS INTERNATIONAL (Ireland)
  - VIVID COMPONENTS LTD (United Kingdom)
  - INESC TEC - INSTITUTO DE ENGENHARIA DE SISTEMAS E COMPUTADORES, TECNOLOGIA E CIENCIA (Portugal)
  - ACST GMBH (Germany)
  - VLC PHOTONICS SOCIEDAD LIMITADA (Spain)
  - BAY PHOTONICS LTD (United Kingdom)
- Project Coordinator: Dr. Alan Davy

TERRANOVA (1/2)

- Project Title: Terabit/s Wireless Connectivity by Terahertz Innovative Technologies to deliver Optical Network Quality of Experience in Systems Beyond 5G

- Project Duration: July 2017 – December 2019

- Project Goals:
  - Realistic THz channel model and THz-oriented information theoretic framework for link-level and network-level
  - Pencil-beam antenna arrays design and device tracking methods
  - THz-driven hybrid MAC layer protocols, device discovery algorithms and caching and highly adaptable framework for overall optimal resource management
  - Implementation and demonstration of cost- and energy-efficient optical RF-frontend for optical to THz interfacing and baseband digital signal processing for combined optical-wireless terabit transmission links

TERRANOVA (2/2)

- Project Partners:
  - UNIVERSITY OF PIRAEUS RESERACH CENTER (Greece)
  - FRAUNHOFER SOCIETY (Germany)
  - INTRACOM SA TELECOM SOLUTIONS (Greece)
  - OULUN YLIOPISTO (Finnland)
  - JCP-CONNECT (France)
  - ALTICE LABS SA (Portugal)
  - PICADVANCED SA (Portugal)

ULTRAWAVE (1/2)

- Project Title: Ultra capacity wireless layer beyond 100 GHz based on millimeter wave Traveling Wave Tubes
- Project Duration: September 2017 – August 2020
- Project Goals:
  - Objective 1: Exploitation of the whole millimeter wave spectrum both in PmP and PtP for the maximum flexibility in network architecture to respond to the irreversible traffic growth.
  - Objective 2: Demonstration of two novel TWTs at D-band and G-band and a full European chipset for D-band and G-band.
  - Objective 3: First outdoor demonstration D-band PmP at and a PtP as true “fiber on air” at G-band.

ULTRAWAVE
Ultra capacity wireless layer beyond 100 GHz based on millimeter wave Traveling Wave Tubes

ULTRAWAVE (2/2)

- Coordinator Claudio Paoloni, Lancaster University, UK
- Project Partners:

Lancaster University	UK
Fibernova	Spain
Ferdinand Braun Institute	Germany
Goethe University	Germany
HFSE	Germany
OMMIC	France
Universitat Politecnica de Valencia	Spain
University of Rome “Tor Vergata”	Italy

WORTECS (1/2)

- Project Title: Wireless Optical/Radio Terabit Communications
- Project Duration: September 2017 – August 2020
- Project Goals:
  - Development of a system able to deliver ultra-high throughput (up to Tbps) meeting low latency and positioning requirements
    - Radio mm-wave prototype links operating above 90 GHz able to deliver extremely high capacity and low latency
    - LiFi systems offering multi-Gbps up to Tbps in indoor spaces
  - Development of innovative network coordination systems in order to deliver Tbps data rates, with low latency, in a multi Wireless Access Technologies (WAT) environment
  - Demonstration of the ultra-high data rate prototype for virtual reality use-case
  - Provide inputs to standardization bodies (e.g. IEEE 802.11, IEEE 802.15.7 and 3GPP) where and when relevant

WORTECS (2/2)

- Project Partners:
  - Orange Labs (France)
  - Oledcomm (France)
  - B-Com (France)
  - pureLiFi Ltd (United Kingdom)
  - University of Oxford (United Kingdom)
  - University of Las Palmas (Spain)
  - IHP (germany)

Project: IEEE P802.15 Working Group for Wireless Personal Area Networks (WPANs)

Submission Title: THz Communications – An Overview and Options for IEEE 802 Standardization
Date Submitted: 11 November 2018
Source: Thomas Kürner (Editor) **Company:** TU Braunschweig, Institut für Nachrichtentechnik
Address: Schleinitzstr. 22, D-38092 Braunschweig, Germany
Voice: +495313912416 FAX: +495313915192, E-Mail: t.kuerner@tu-bs.de
Re: n/a
Abstract: Over the last couple of years in particular, THz communications, i. e. the frequency range beyond 275 GHz, has become an attractive new research area for commercial development. It has reached a level of maturity that a couple of projects are now underway to develop technological solutions enabling the set-up of hardware demonstrators. This tutorial will provide a brief overview on the current status of THz Communication systems focusing on ongoing research activities such as the European Horizon 2020 framework, and provide an overview of the ongoing WRC 2019 preparations, as well as discussing the potential for IEEE 802 to play a major role in this interesting frequency range.

Purpose: Tutorial on the activities and the status of the IEEE 802.15 TAG THz presented to the IEEE 802 Plenary

Notice: This document has been prepared to assist the IEEE P802.15. It is offered as a basis for discussion and is not binding on the contributing individual(s) or organization(s). The material in this document is subject to change in form and content after further study. The contributor(s) reserve(s) the right to add, amend or withdraw material contained herein.
Release: The contributor acknowledges and accepts that this contribution becomes the property of IEEE and may be made publicly available by P802.15.

THz Communications – An Overview and Options for IEEE 802 Standardization

Tutorial at IEEE 802 Plenary, November 2018
by IEEE 802.15 TAG THz

Presenters:
Thomas Kürner, TU Braunschweig, Germany
Akifumi Kasamatsu, NICT, Japan
Onur Sahin, InterDigital, UK
Carlos Castro, Fraunhofer Heinrich Hertz Institute, Germany

Outline

- Status on THz Communication in Standardisation, Regulation and Research (Thomas Kürner)
- Silicon CMOS Transceiver for Terahertz Wireless Communication (Akifumi Kasamatsu)
- Towards Ultra-High Throughput FEC Design: EPIC Project (Onur Sahin)
- Integration of fiber-optics/THz Technologies (Carlos Castro)
- Conclusion and Outlook (Thomas Kürner)

Status on THz Communication in Standardisation, Regulation and Research

Thomas Kürner, Sebastian Rey, Johannes Eckhardt

Technische Universität Braunschweig, Germany

Motivation for THz Communications

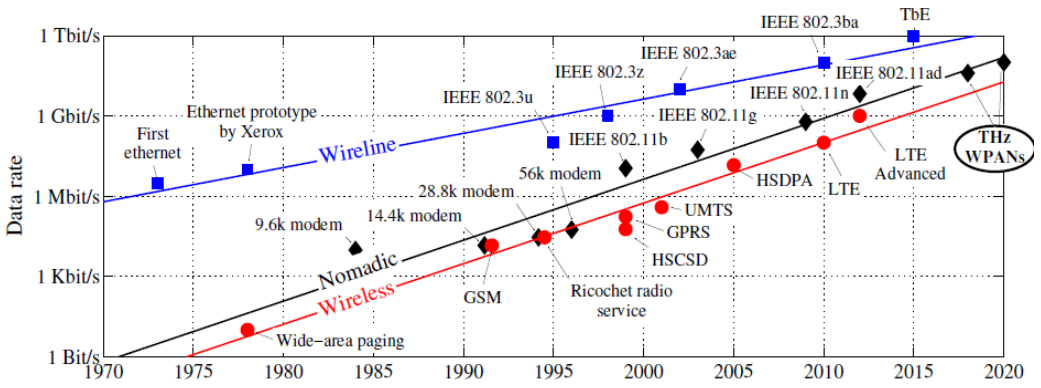

Temporal Evolution of Data Rates in Transmission Schemes

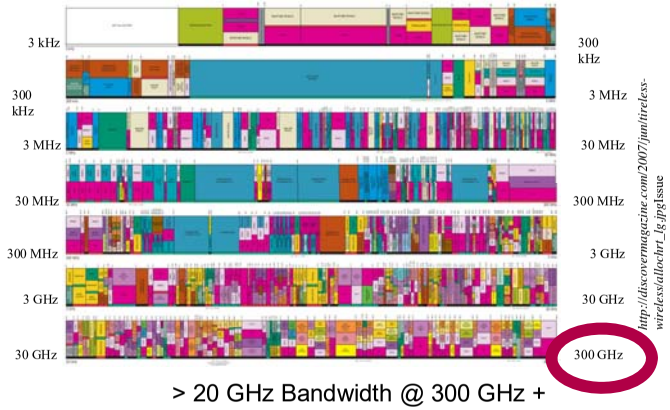

> 20 GHz Bandwidth @ 300 GHz +

Spektrum

10..100 Gbit/s

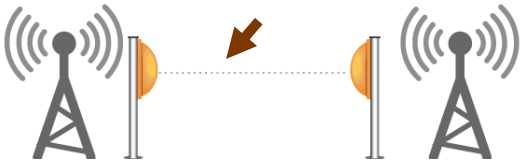

Backhaul/Fronthaul links

Applications (as in IEEE Std. 802.15.3d-2017)

10...100 Gbit/s

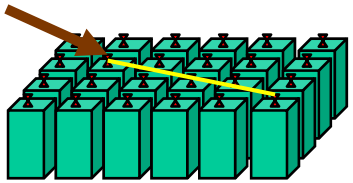

Wireless Links in Data Centers

10...100 Gbit/s

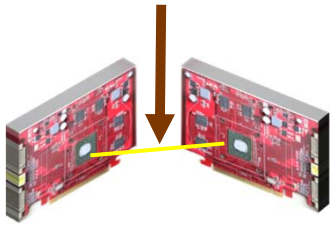

Intra-Device Communication

STATUS IN STANDARDISATION

IEEE Std. 802.15.3d-2017
Key Facts

- New PHY for Std. IEEE 802.15.3-2016
- MAC is mainly based on IEEE 802.15.3e-2017, which introduced the concept of „Pairnet“
  - Point-to-point nature with highly-directive antennas reduces the problem of interference and „fighting for access“
  - Positions of Tx and Rx antennas are known
- 8 different channel bandwidths (as multiples of 2.16 GHz)
- 2 PHY-modes (THz-SC PHY, THz-OOK-PHY) with 7 modulation schemes:
  - BPSK, QPSK, 8-PSK, 8-APSK, 16-QAM, 64 QAM, OOK
- 3 channel coding schemes:
  - 14/15-rate LDPC (1440,1344), 11/15-rate LDPC (1440,1056), 11/15-rate RS(240,224)-code.

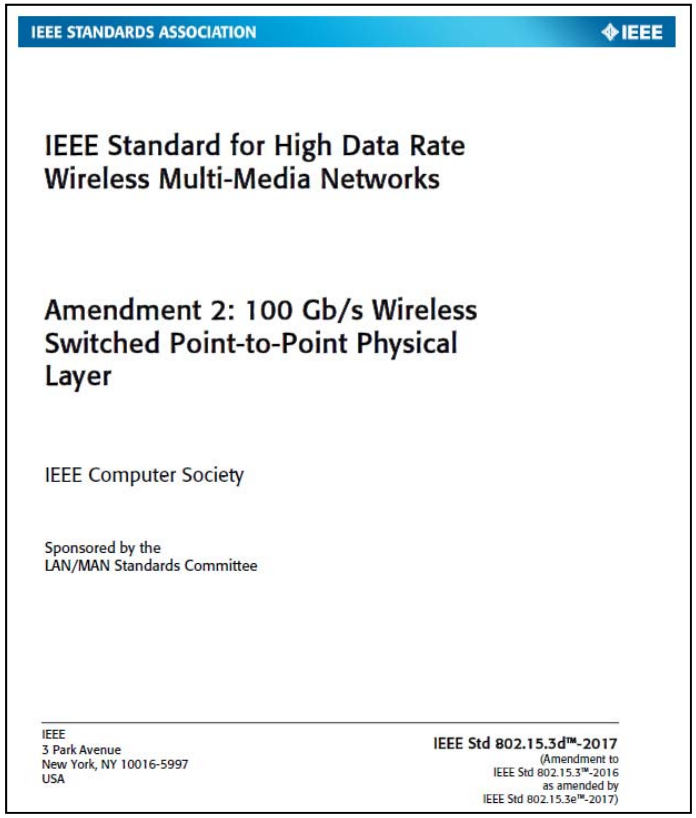
IEEE STANDARDS ASSOCIATION IEEE

IEEE Standard for High Data Rate Wireless Multi-Media Networks

Amendment 2: 100 Gb/s Wireless Switched Point-to-Point Physical Layer

IEEE Computer Society

Sponsored by the LAN/MAN Standards Committee

IEEE
3 Park Avenue
New York, NY 10016-5997
USA

IEEE Std 802.15.3d™-2017
(Amendment to IEEE Std 802.15.3™-2016 as amended by IEEE Std 802.15.3e™-2017)

Channel plan

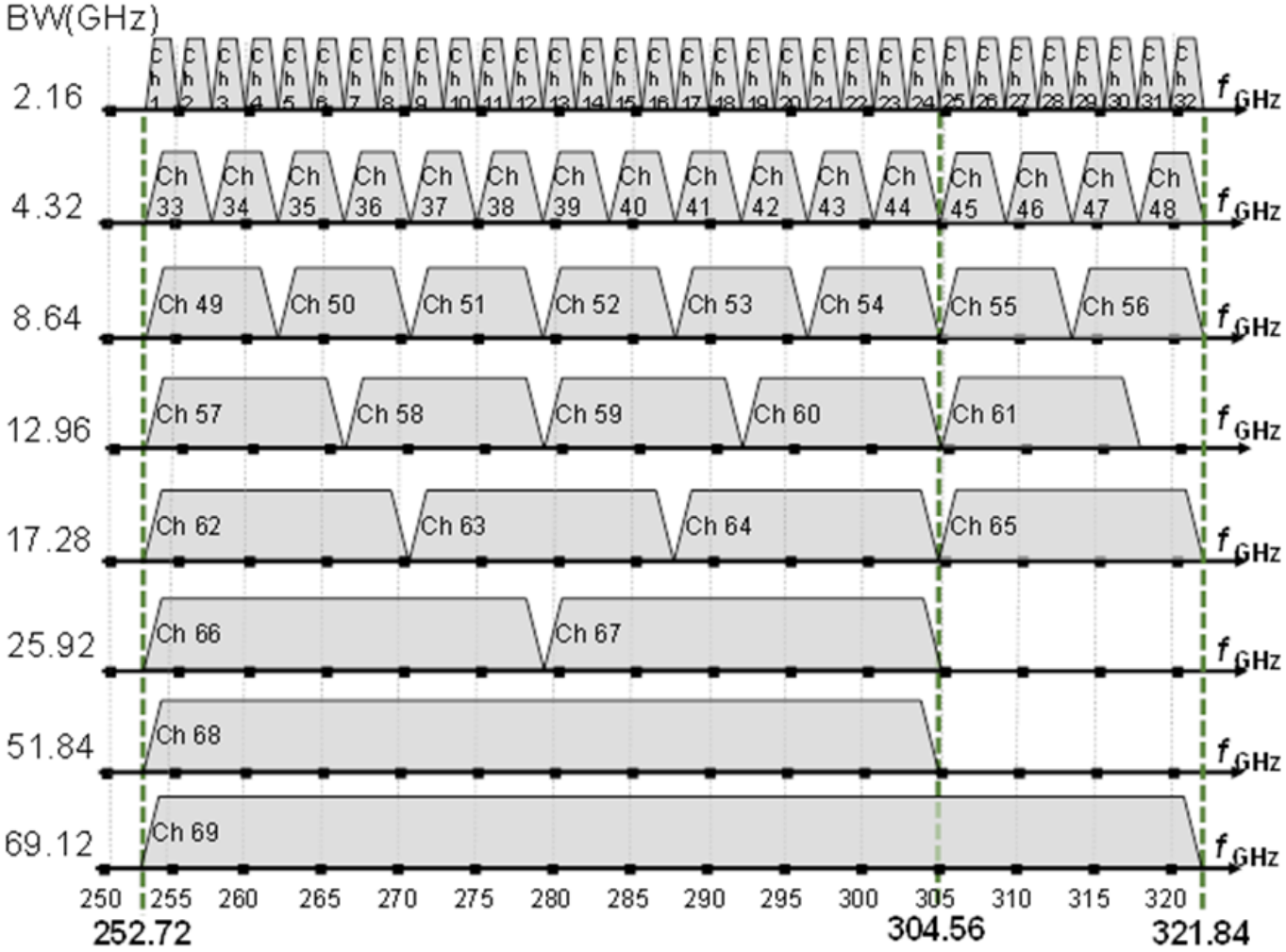

Exemplary Simulation Results for Backhaul/Fronthaul Applications

- Assumption of a margin of 20 dB for atmospheric attenuation

MCS Identifier	Modulation	FEC Rate	Maximum Link Distance in m							
			2.16 GHz	4.32 GHz	8.64 GHz	12.96 GHz	17.28 GHz	25.92 GHz	51.84 GHz	69.12 GHz
0	BPSK	11/15	5343	3778	2671	2181	1889	1542	1091	944
1	BPSK	14/15	3646	2578	1823	1488	1289	1052	744	644
2	QPSK	11/15	3796	2684	1898	1550	1342	1096	775	671
3	QPSK	14/15	2563	1812	1282	1046	906	740	523	453
4	8-PSK	11/15	2157	1525	1078	880	762	623	440	381
5	8-PSK	14/15	1725	1220	862	704	610	498	352	305
6	8-APSK	11/15	2157	1525	1078	880	762	623	440	381
7	8-APSK	14/15	1729	1223	864	706	611	499	353	306
8	16-QAM	11/15	1709	1209	855	698	604	493	349	302
9	16-QAM	14/15	1152	814	576	470	407	332	235	204
10	64-QAM	11/15	949	671	475	387	336	274	194	168
11	64-QAM	14/15	581	411	291	237	205	168	119	103

Data rate > 50 Gbit/s

Data rate > 100 Gbit/s

Source: doc. IEEE 802.15-17-0039-04-003d

STATUS IN REGULATION

Starting point for Radio Regulations: Outcome of WRC 2012

- **5.565** A number of bands in the frequency range 275-1 000 GHz are identified for use by administrations for passive service applications. The following specific frequency bands are identified for measurements by passive services:
- – radio astronomy service: 275-323 GHz, 327-371 GHz, 388-424 GHz, 426-442 GHz, 453-510 GHz, 623-711 GHz, 795-909 GHz and 926-945 GHz;
- – Earth exploration-satellite service (passive) and space research service (passive): 275-286 GHz, 296-306 GHz, 313-356 GHz, 361-365 GHz, 369-392 GHz, 397-399 GHz, 409-411 GHz, 416-434 GHz, 439-467 GHz, 477-502 GHz, 523-527 GHz, 538-581 GHz, 611-630 GHz, 634-654 GHz,657-692 GHz, 713-718 GHz,729-733 GHz, 750-754 GHz, 771-776 GHz, 823-846 GHz, 850-854 GHz, 857-862 GHz, 866-882 GHz, 905-928 GHz, 951-956 GHz, 968-973 GHz and 985-990 GHz.
- The use of the range 275-1 000 GHz by the passive services does not preclude use of this range by active services.
- Administrations wishing to make frequencies in the 275-1 000 GHz range available for active service applications are urged to take all practicable steps to protect these passive services from harmful interference until the date when the Table of Frequency Allocations is established in the above-mentioned 275-1 000 GHz frequency range.
- All frequencies in the range 1 000-3 000 GHz may be used by both active and passive services. (WRC-12)

Possible Interference Scenarios to be studied

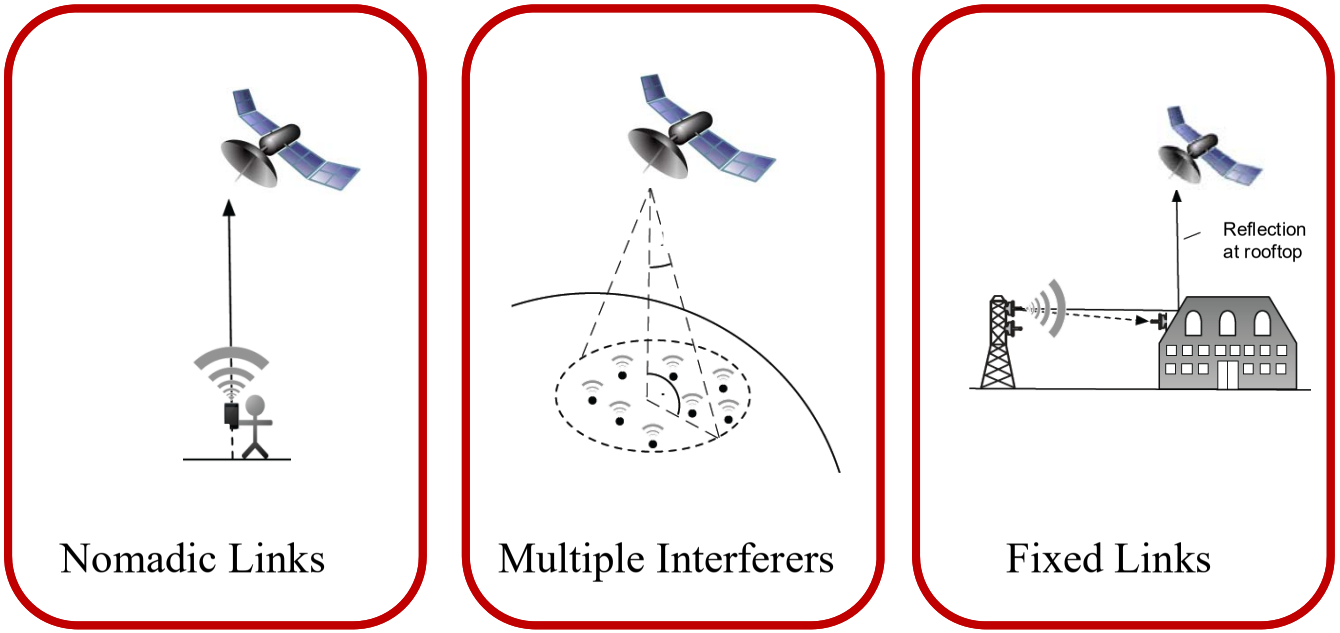

S. Priebe et al. „Interference Investigations of Active Communications and Passive Earth Exploration Services in the THz Frequency Range“, IEEE Transactions on THz Science and Technology, vol. 2, no. 5, pp. 525-537, 2012

Current status of the preparatory work of AI 1.15 @ WRC 2019

- WRC 2015 agreed in resolution 767:
  - to have an agenda item for WRC 2019 to consider identification of spectrum for land-mobile and fixed active services in the range of 275 GHz to 450 GHz while maintaining protection of the passive services identified in the existing footnote 5.565.

  Current Status
  - Regarding the new active services the reports ITU-R F.2416 and ITU-R M.2417 have been published.
  - The frequency bands of interest are
    - between 275 to 450 GHz for land mobile applications.
    - especially, 275-325 GHz and 380-445 GHz for fixed service applications
  - ITU-R WP 1A is conducting sharing studies and preliminary results are available.
    - For instances in the band 275 to 296 GHz coexistence with the passive services seems to be possible. This provides a continues bandwidth of 44 GHz with the existing band from 252-275 GHz.
    - Other bands are under consideration.

RECENT ACTIVITIES IN THE EU-RESEARCH PROGRAM HORIZON 2020

H2020-ICT-09-2017-Cluster on Networks Beyond 5G

- Seven funded projects from the H2020 calls ICT-09-2017 and EUJ-02-2018 form an informal cluster

  https://thorproject.eu/links/ict-09-2017-cluster

  - DREAM: D-band Radio solution Enabling up to 100 Gb/s reconfigurable Approach for Meshed beyond 5G network
  - EPIC: Enabling Practical Wireless Tb/s Communications with Next Generation Channel Coding
  - TERAPOD: Terahertz based Ultra High Bandwidth Wireless Access Networks
  - TERRANOVA: Terabit/s Wireless Connectivity by Terahertz Innovative Technologies to deliver Optical Network Quality of Experience in Systems Beyond 5G
  - ULTRAWAVE: Ultra capacity wireless layer beyond 100 GHz based on millimeter wave Traveling Wave Tubes
  - WORTECS: Wireless Optical/Radio Terabit Communications
  - ThoR: TeraHertz end-to-end wireless systems supporting ultra high data Rate applications

Horizon 2020 Project TERAPOD

- Project Duration: September 2017 – August 2020

- Project Goals:
  - to investigate and demonstrate the feasibility of ultra high bandwidth wireless access networks operating in the Terahertz band.
  - The project will focus on end to end *demonstration of the THz wireless link within a Data Centre Proof of Concept deployment*, while also investigating other use cases applicable to beyond 5G
  - The project seeks to bring THz communication a leap closer to industry uptake through leveraging recent advances in THz components, a thorough measurement and characterization study of components and devices, coupled with specification and validation of higher layer communication protocol specification.

- The TERAPOD project has received funding from the European Union's Horizon 2020 research and innovation programme under grant agreement No 761579
- Web Page: www.terapod-project.eu

Some first Results from TERAPOD

- 300 GHz channel measurements in the Research Data Center of Dell/EMC using the time-domain channel sounder (approx. 8 GHz of bandwidth) available at TU Braunschweig

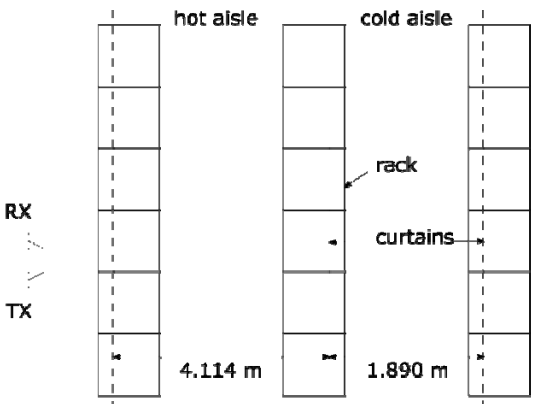

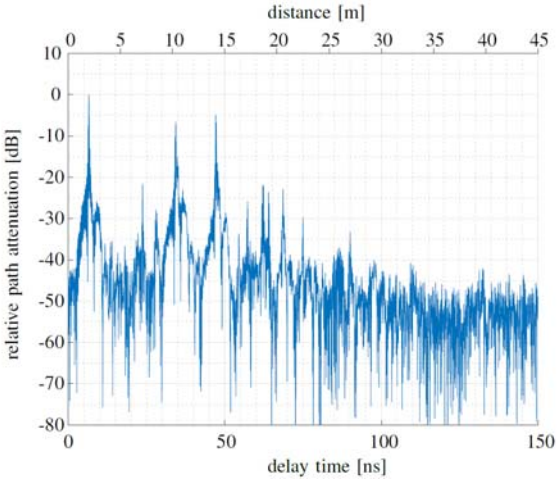

For more information see doc. IEEE 802.15-18-0519-00-0thz

Horizon 2020 EU-Japan Project ThoR on THz Backhaul/Fronthaul Links

- Project duration 1.7.2018-30.6.2020

- ThoR is equally funded from
  - Horizon 2020, the European Union's Framework Programme for Research and Innovation, under grant agreement No. 814523 and
  - the National Institute of Information and Communications Technology in Japan (NICT)

Web page: www.thorproject.eu

Participants	Country
Companies	
Deutsche Telekom AG	Germany
NEC Corporation	Japan
Siklu Communication Ltd.	Israel
Vivid Components Ltd.	UK
HRCP	Japan
R&D	
Fraunhofer IAF	Germany
University of Lille / IEMN Laboratory	France
Universities	
TU Braunschweig **(Coordinator, EU)**	Germany
Chiba Institute of Technology	Japan
Gifu University	Japan
University of Stuttgart	Germany
Waseda University **(Coord., Japan)**	Japan

ThoR Concept towards the Demonstration of a 300 GHz Link for Backhaul/Fronthaul

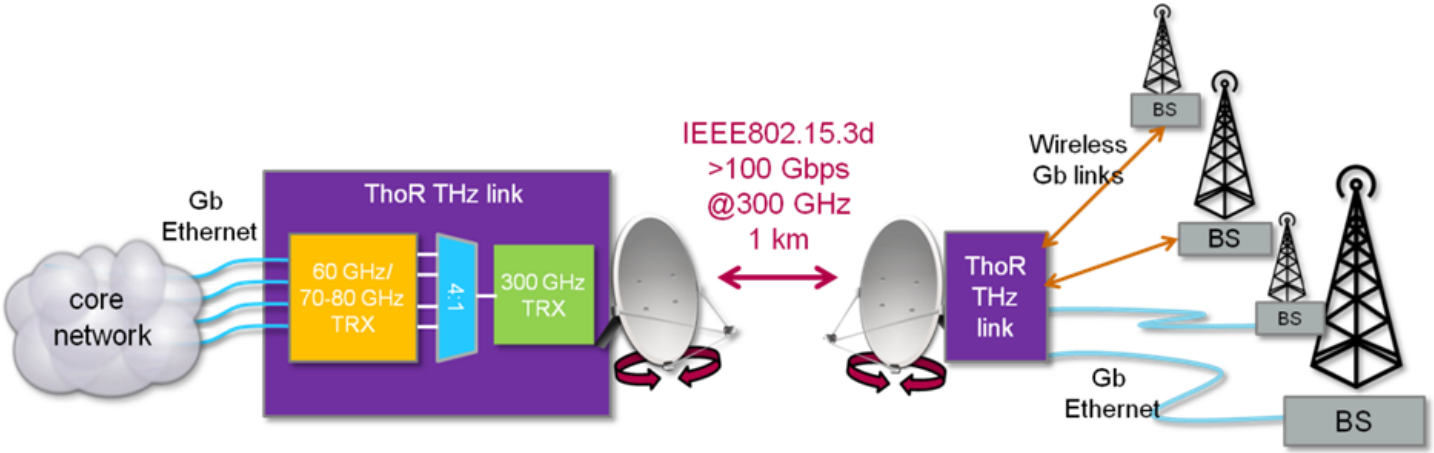

Key Enabling Technologies (KETs)

1. Photonics-based LO
2. Electronic THz amplifier and up-converter
3. High Power THz traveling-wave tube amplifier
4. Electronic THz receiver
5. Digital baseband and networking interface
6. Contributions to spectrum regulation and interference mitigation

Key Performance indicators (KPIs)

1. Transmitter linearity, bandwidth & output power
2. Spectral purity of photonic THz LO
3. Bandwidth, noise & linearity in the receiver
4. Real-time data rate processing capability
5. Spectral efficiency (bit/s/Hz)
6. System capacity (Gbps×km)

For more information see doc. IEEE 802.15-18-0518-00-0thz

In the following presentations …

…we will provide a more detailed overview on three research activties covering:

- CMOS for THz
- Forward Error Correction for the Tbps age
- Seamless integration of fibre with THz wireless

Silicon CMOS Transceiver for Terahertz Wireless Communication

Akifumi Kasamatsu[#1], Shinsuke Hara[#1], Kyoya Takano[#2], Kosuke Katayama[#2], Ruibing Dong[#2], Sangyeop Lee[#2], Issei Watanabe[#1], Norihiko Sekine[#1], Junji Sato[#3], Takeshi Yoshida[#2], Shuhei Amakawa[#2], Minoru Fujishima[#2]

[#1] National Institute of Information and Communications Technology
[#2] Hiroshima University
[#3] Panasonic

Challenge of 300-GHz CMOS transceiver

- PA- and LNA-less architecture because of low f_{max}
- High data rate with multi-level signals (QPSK, QAMs)

for high speed wireless communication

Developed 300-GHz transceivers
in 40-nm Si CMOS process with $f_{max} \simeq 280$GHz
in collaboration with Hiroshima Univ., Panasonic, and NICT.

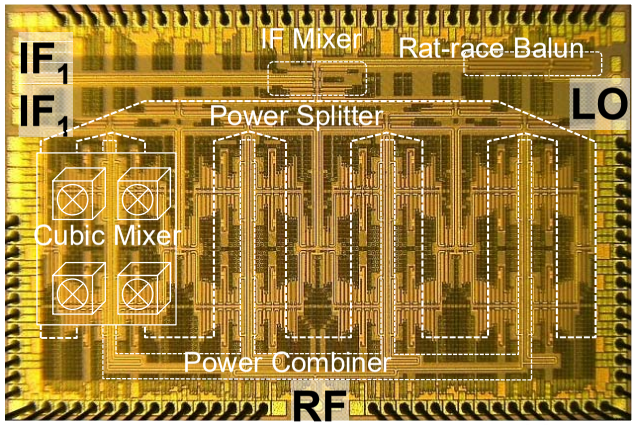

300GHz Si CMOS transmitter[1]

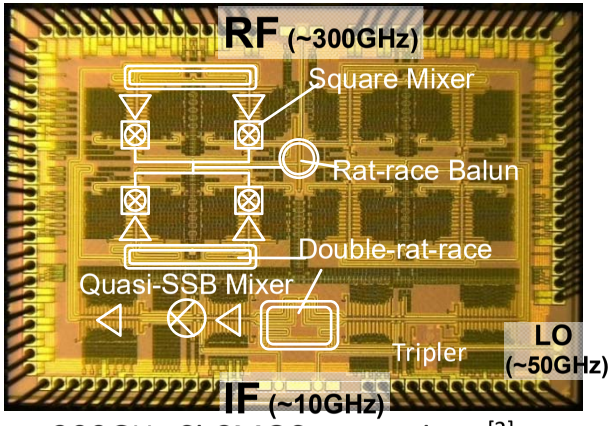

300GHz Si CMOS transmitter[2]

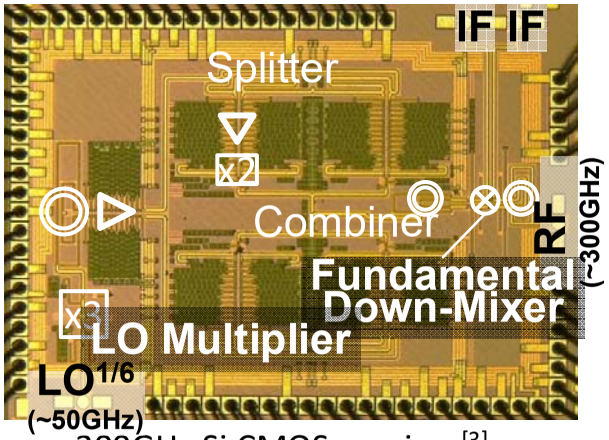

300GHz Si CMOS receiver[3]

[1] K. Katayama, et al.,ISSCC2016, pp. 342–343, Feb. 2016. [2] K. Takano, et al., ISSCC2017, pp. 308–309, Feb. 2017.
[3] S. Hara, et al., IMS2017, pp. 1-4, June 2017.

Key technology for CMOS transmitter

- Gate-pumped Mixer (Square-Mixer)
  - Square-Mixer is essentially a doubler.
  - IF_2 and LO signals are injected into the gate of the FET mixer.
    Up-converted IF_2 signal using LO is generated.
    Relatively high output power, good linearity -> RF signal
- Image suppression and LO leak cancellation systems

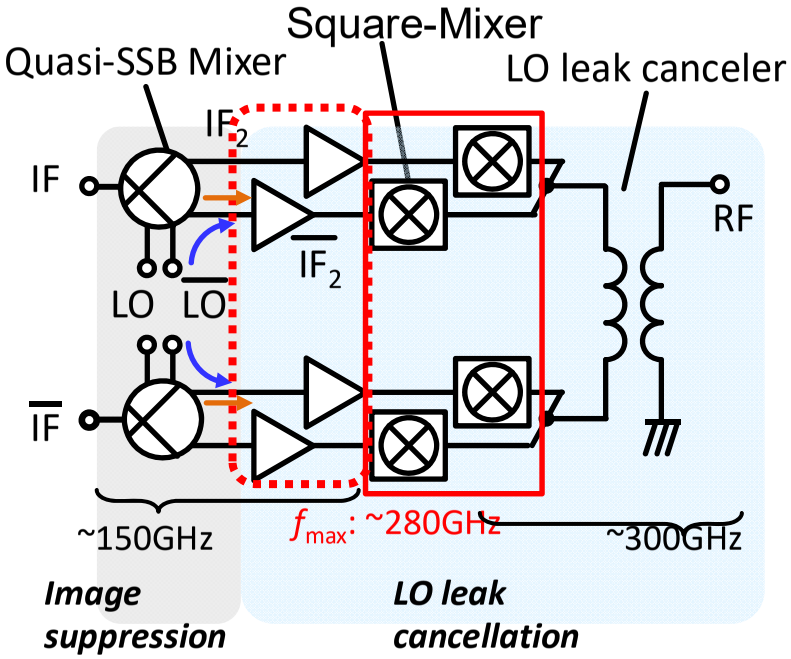

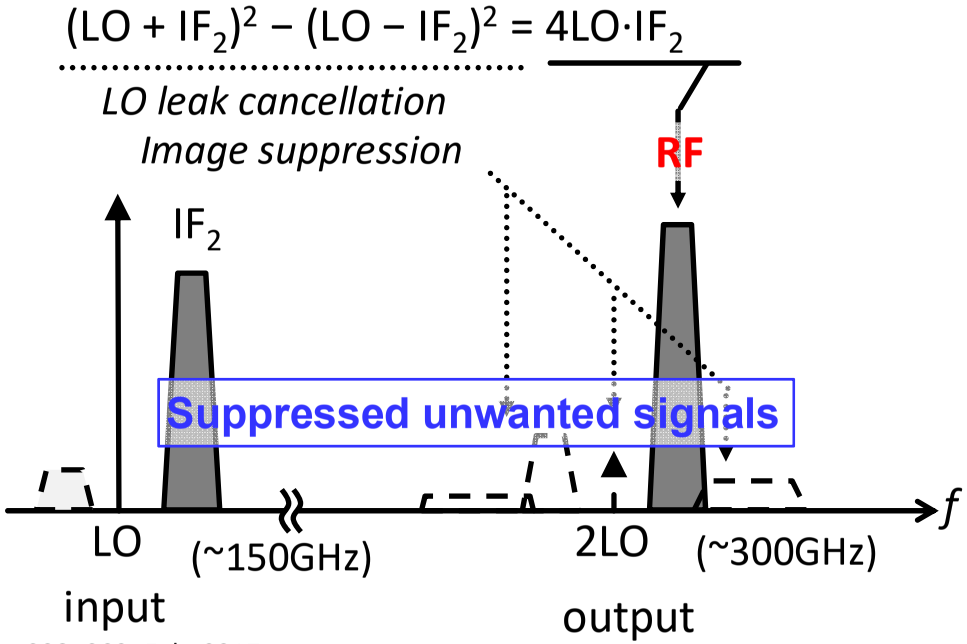

[2] K. Takano, et al., ISSCC2017, pp. 308–309, Feb. 2017.

300-GHz CMOS transmitter

- Schematic, chip micrograph, and measured performance of the 300-GHz CMOS transmitter

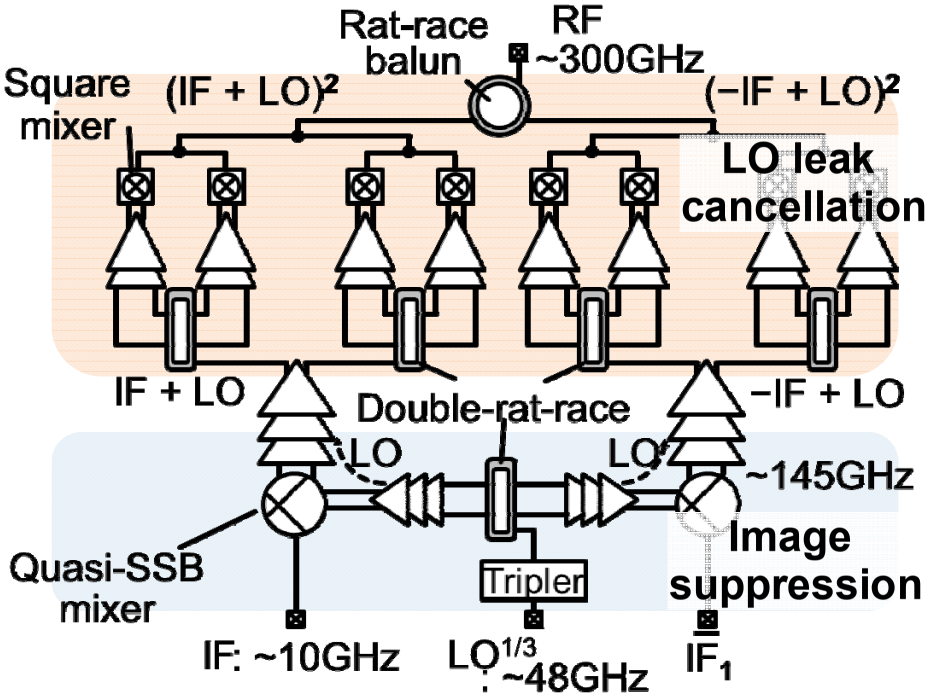

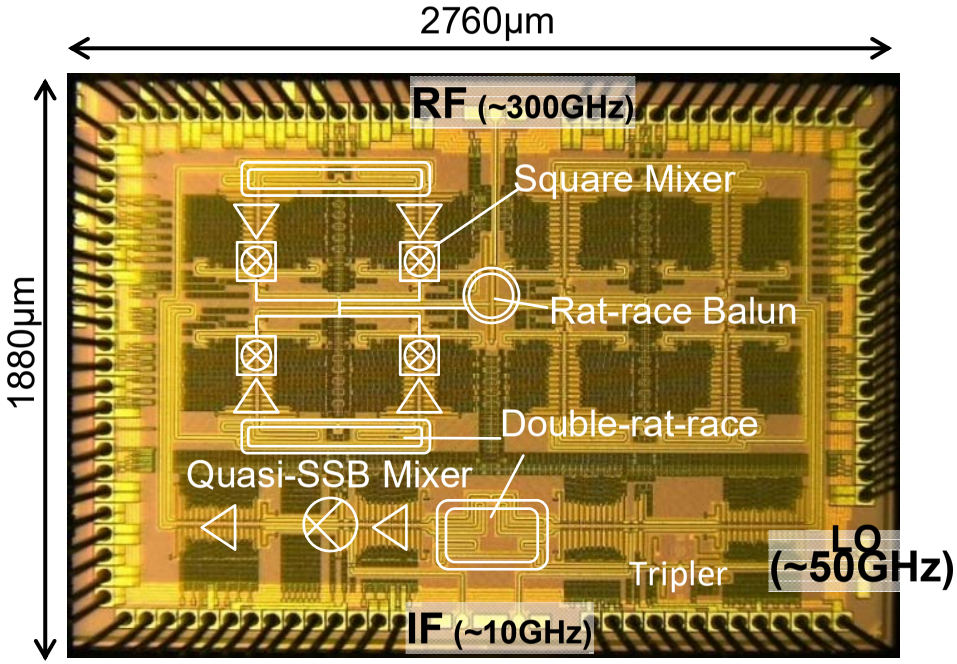

Pout: –5.5 dBm
RF Freq.: 289 - 311 GHz
3-dB BW: 22 GHz

[2] K. Takano, et al., ISSCC2017, pp. 308–309, Feb. 2017.

Demonstration of Tx chip

Modulation	32QAM
Constellation (Equalized)	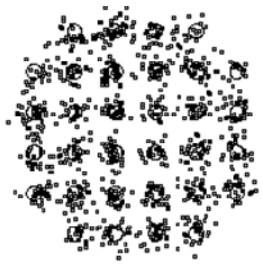
EVM	8.9%
Data rate	105Gb/s

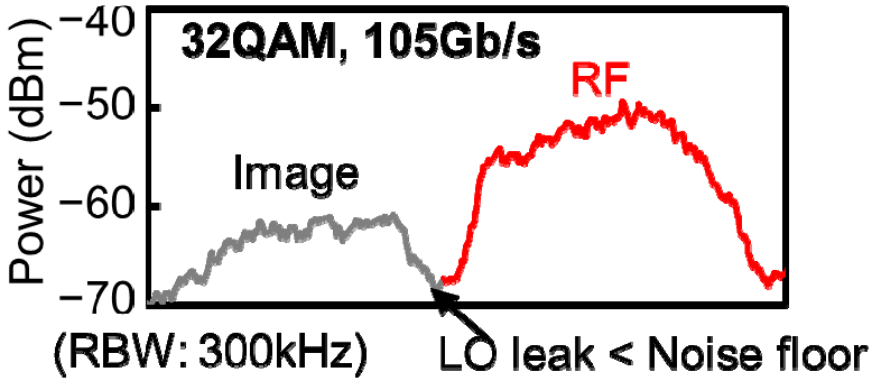

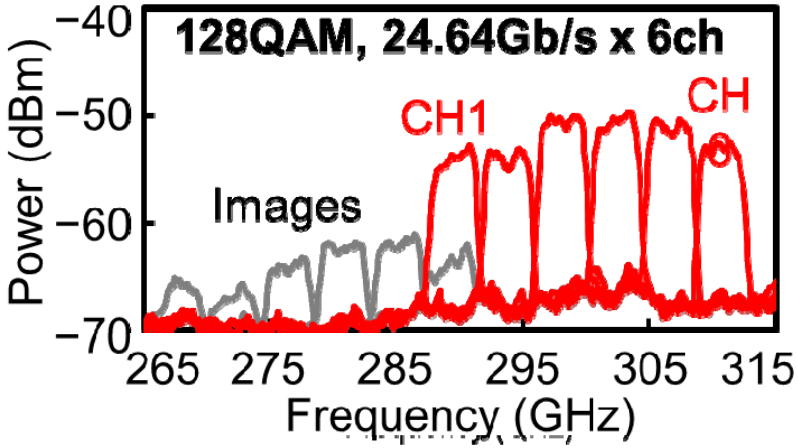

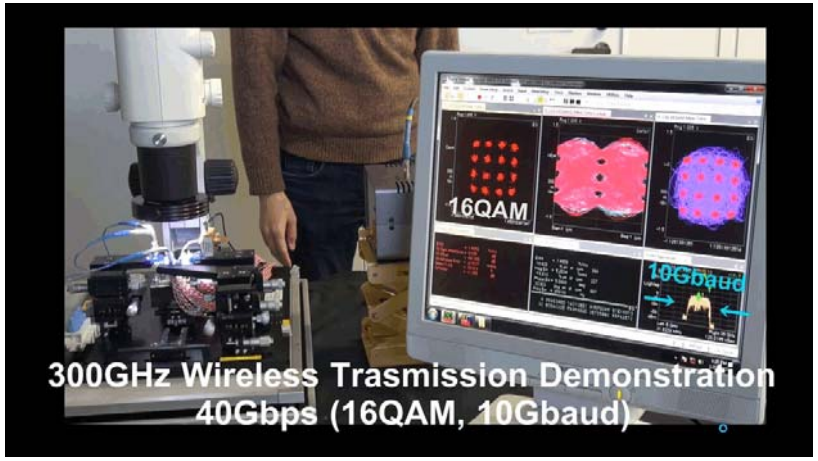

Achieved a highest data rate of 105 Gbit/s with 32QAM

[2] K. Takano, et al., ISSCC2017, pp. 308–309, Feb. 2017.

300-GHz CMOS receiver

- Schematic, chip micrograph, and measured performance of the 300-GHz CMOS receiver

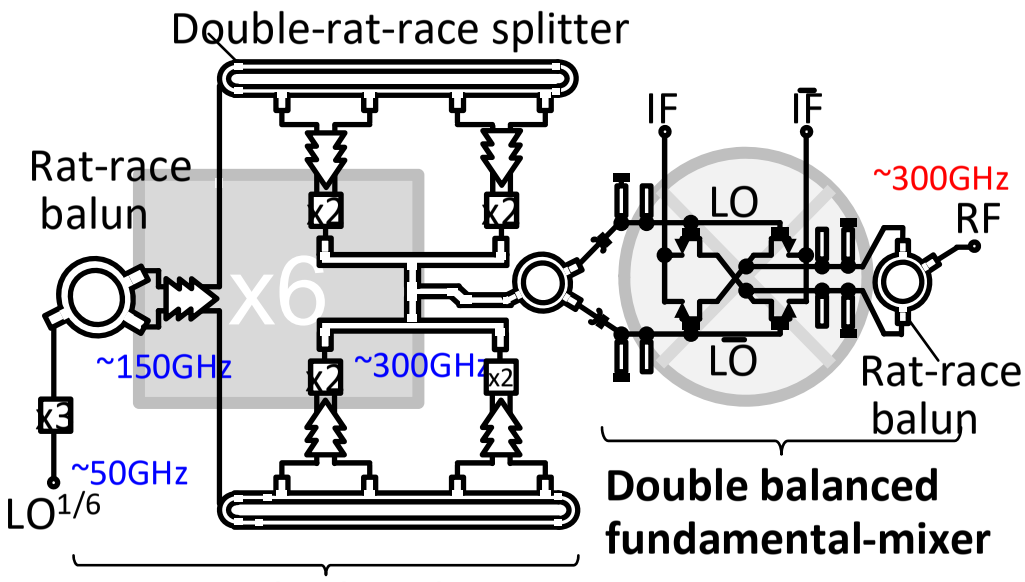

(Generating high LO power)

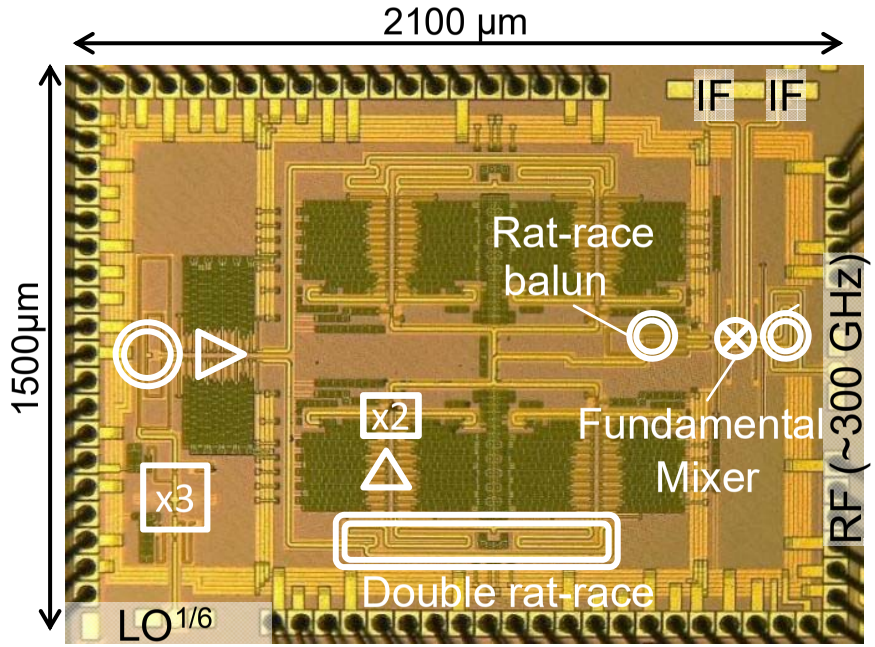

(~ 50 GHz)

CG peak: –19.5 dB
Noise figure: 27 dB
3-dB BW: 26.5 GHz

[3] S. Hara, et al., IMS2017, pp. 1-4, June 2017.

Wireless performance with TX and RX chips

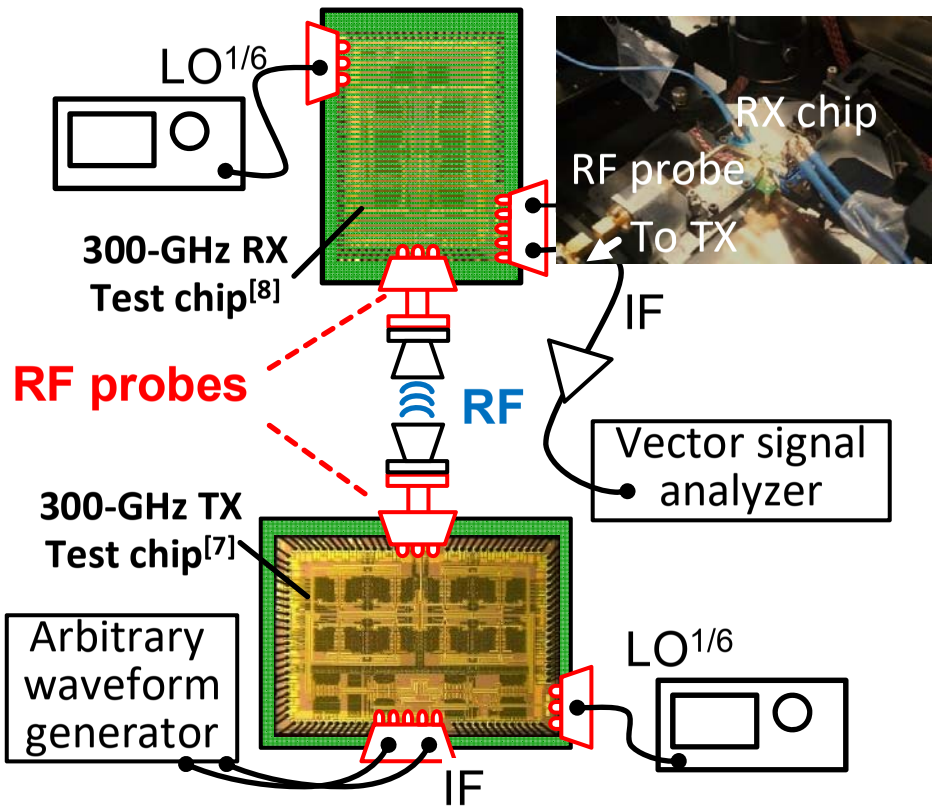

	QPSK	16-QAM
Constellation (Equalized)	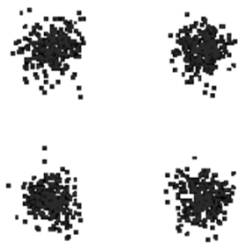	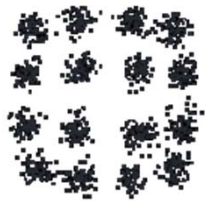
EVM	19.0%rms	12.2%rms
BER	7.1×10^{-8}	9.3×10^{-5}
Sym. rate	14 Gbaud	8 Gbaud
Data rate	28 Gbit/s	32 Gbit/s

Achieved a wireless data rate of 32 Gbit/s

⇒ For practical use, CMOS TX and RX chip must be packaged and modularized.

[2] K. Takano, et al., ISSCC2017, pp.308-309, Feb. 2017. [3] S. Hara, et al., IMS2017, pp. 1-4, June 2017.

300-GHz CMOS TX and RX modules

- CMOS-chip-to-waveguide transition integrated into a low-cost multilayered glass epoxy PCB

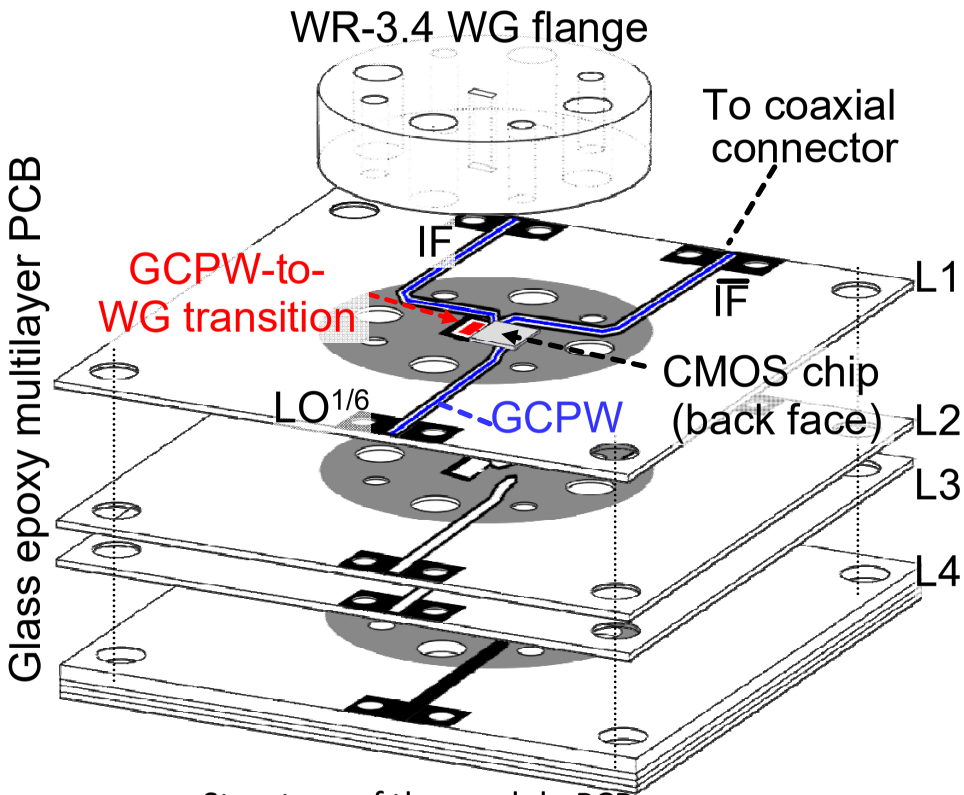

Structure of the module PCB

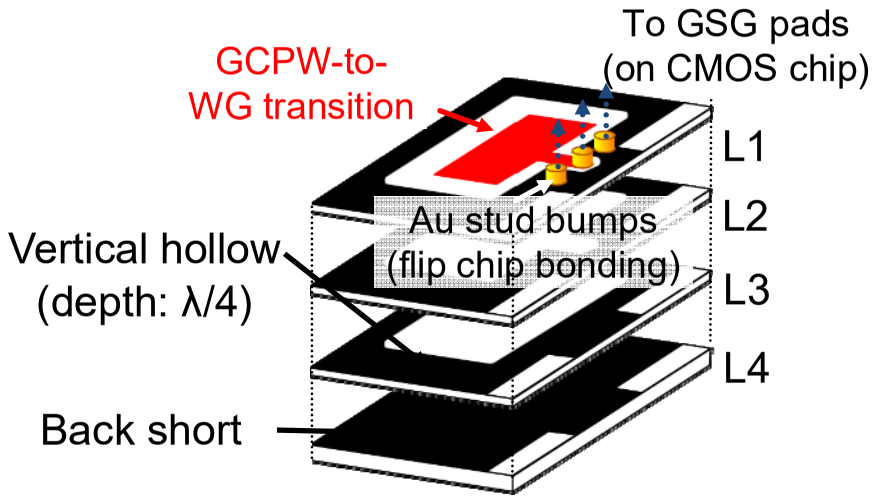

Close-up view of WG transition

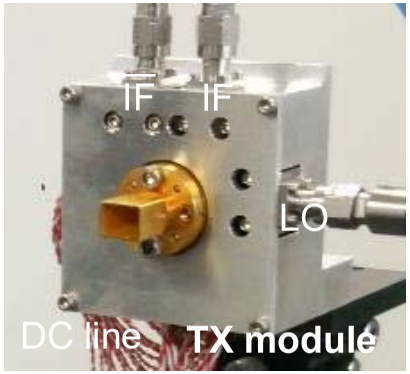

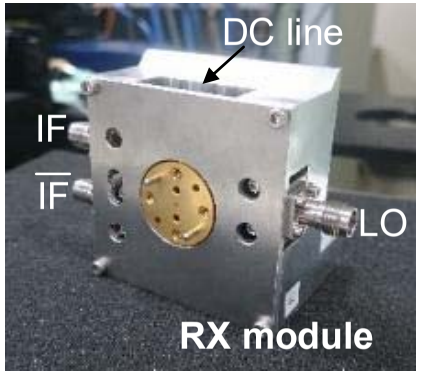

[4] K. Takano, et al., RWS2018, pp. 154–156, Jan. 2018. [5] S. Hara, et al., EuMW2018, Sep. 2018.

Performance of TX module

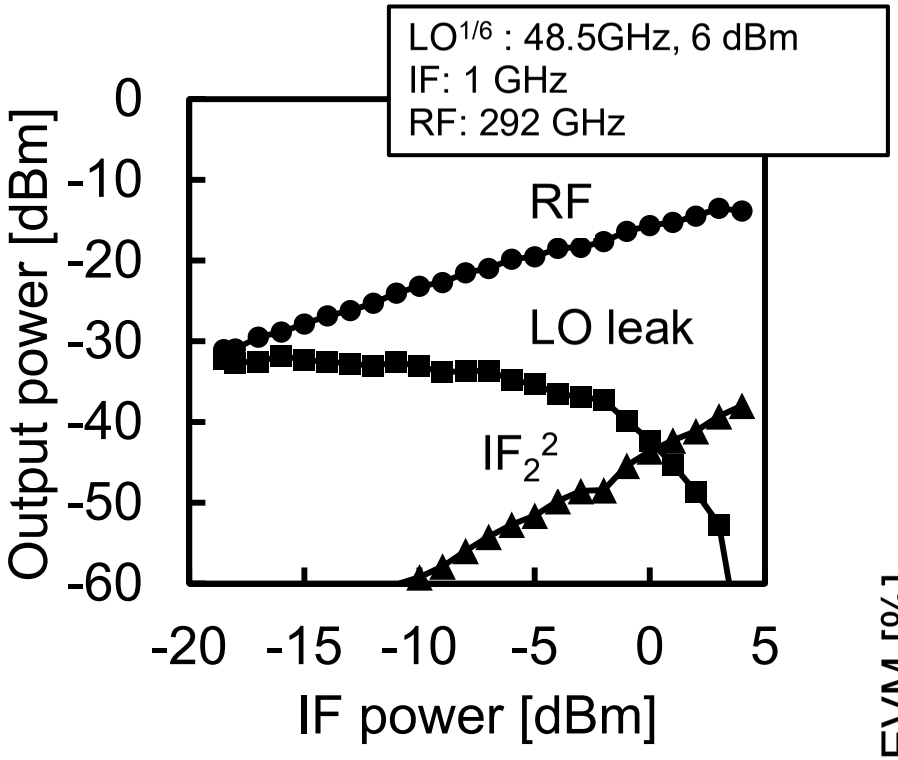

Pout : –13.5 dBm
3-dB BW: 10 GHz

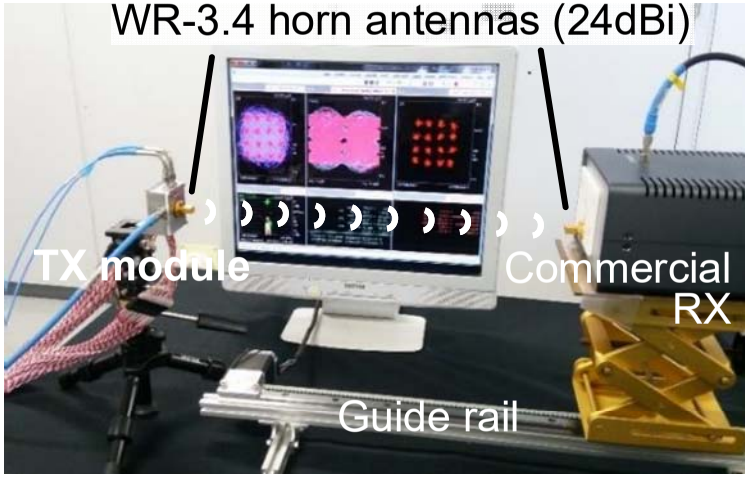

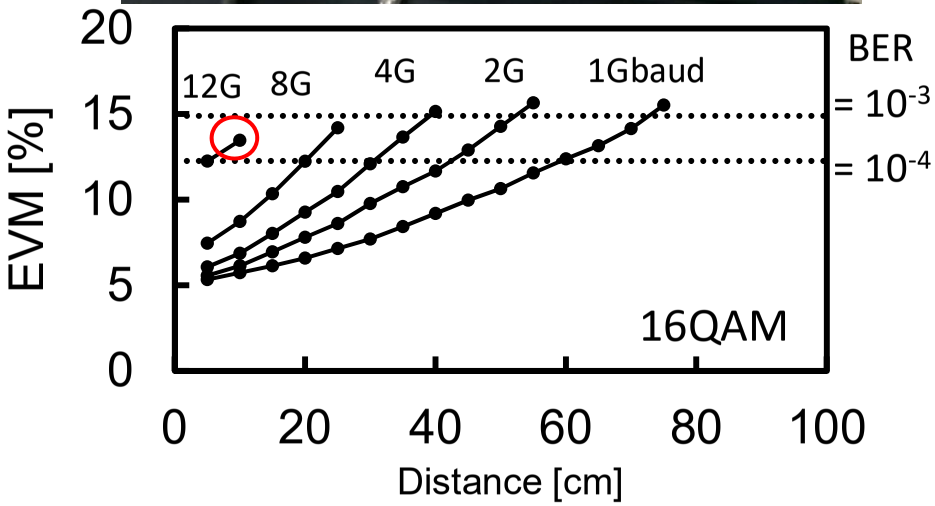

Achieved a wireless data rate of 48 Gbit/s with 16-QAM

[4] K. Takano, et al., RWS2018, pp. 154–156, Jan. 2018.

Performance of RX module and wireless link

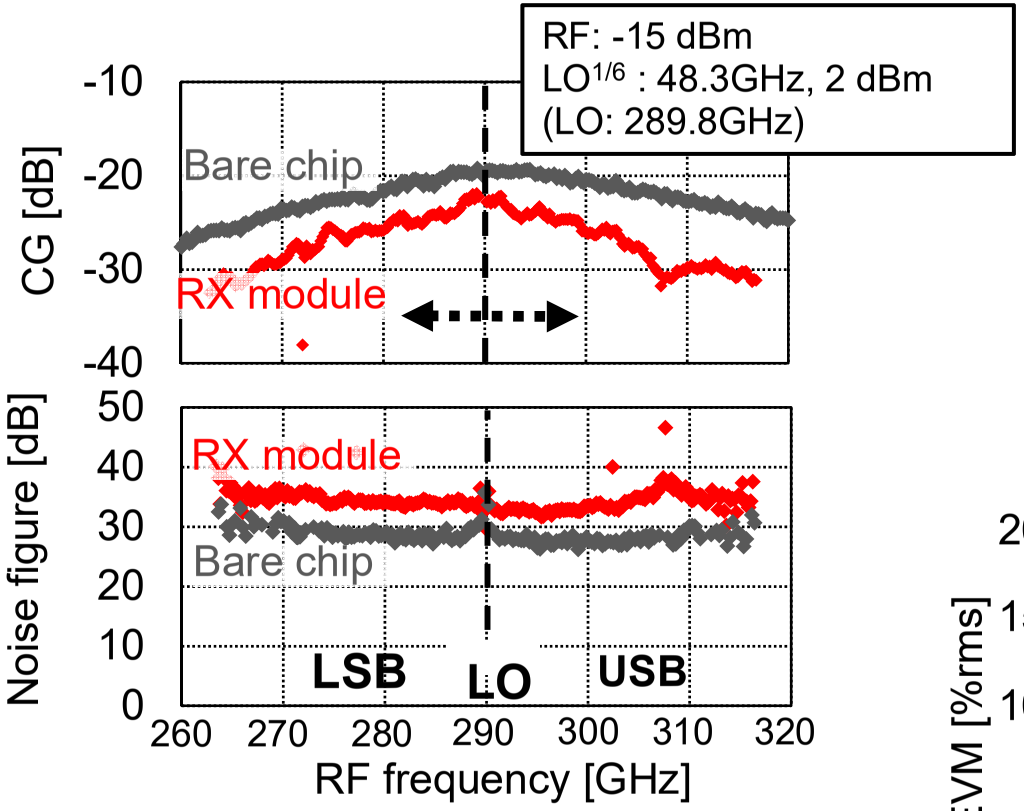

CG peak: 23.7 dB, NF: 33 dB
3-dB BW : 18.4 GHz

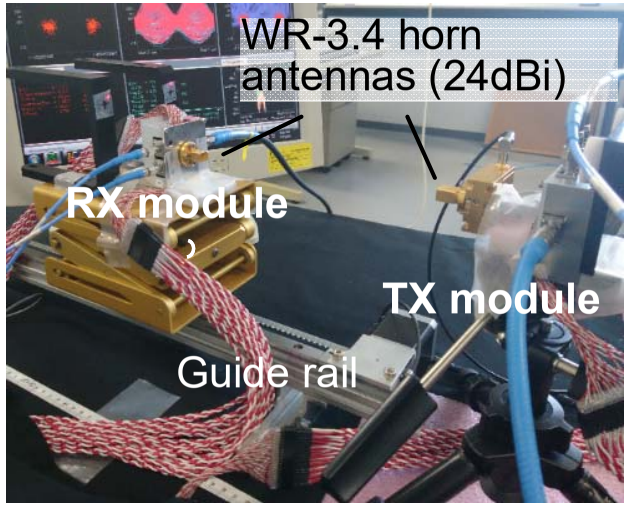

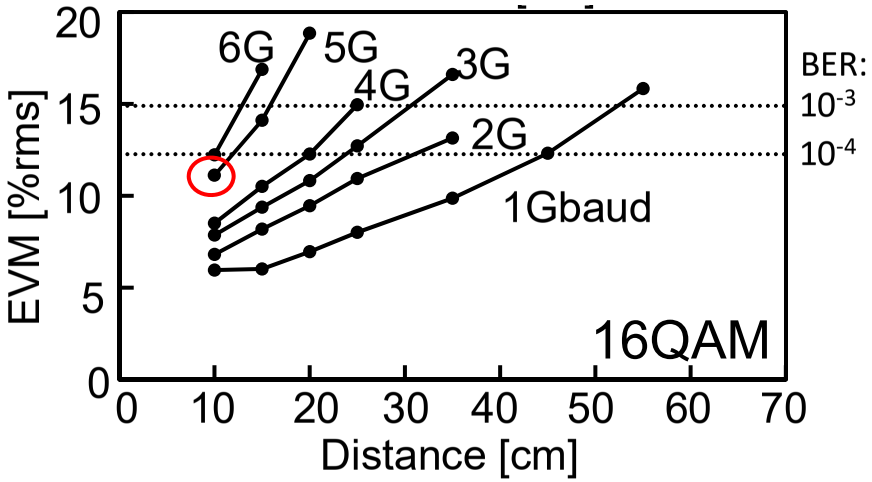

Achieved a wireless data rate of 20 Gbit/s with 16-QAM

[4] K. Takano, et al., RWS2018, pp. 154–156, Jan. 2018. [5] S. Hara, et al., EuMW2018, Sep. 2018.

Towards Ultra-High Throughput FEC Design: EPIC Project

Onur Sahin
InterDigital Europe Ltd.

https://epic-h2020.eu/

Exceeding 100 Gb/s Barrier in Wireless Communications

- **Huge available spectrum** potential above 250 GHz to achieve 100 Gb/s and higher throughputs.
  - 252-325 GHz bands already considered under 802.15.3d.
  - Potential bandwidth allocations: 275-450 GHz in WRC 2019 (AI 1.15).
- Substantial progress in **device-level and RF** front-end.
  - THz photonics based RF front-end solutions demonstrate ~100 Gb/s ([1]).
  - 300 GHz Si CMOS transceiver solutions with >100 Gb/s transmitters ([2]).
- **Novel baseband algorithms and architectures** are necessary to enable ultra-high throughputs in THz domain for a wide range of practical use-cases.
  - **FEC** is the most complex and computationaly intense component in the baseband chain → A key enabler and challenge for ultra-high throughput/THz communications.

State-of-the-Art FEC for High Throughput Wireless Systems

In existing wireless standards, IEEE 802.11ad*, IEEE 802.15.3d, and 3GPP 5G NR present FEC classes with highest throughput requirements.

- IEEE 802.11ad (Target peak **TP: 7 Gb/s**)
  - Rate (1/2, 5/8, 3/4, 13/16) LDPC with code-word length 672
- IEEE 802.15.3d (Target peak **TP: 100 Gb/s**)
  - Rate 14/15 LDPC (1440,1344)
  - Rate 11/15 LDPC (1440,1056)
- 3GPP 5G NR (Target peak **TP: 20 Gb/s**)
  - Flexible QC-LDPC; 20 Gb/s with rate 8/9 is supported

* 802.11ay amendment (Draft 3.0 stage) targets >20 Gb/s, in addition includes Rate (1/2, 5/8, 3/4, 13/16) LDPC-1344. The decoder architectures are based on 11ad LDPC-672 codes.

State-of-the-Art 802.11ad FEC Implementations: 65/28 nm Silicon [3]

Code	Ref.	Code length	Rate support	Process nm	Area mm^2	Freq MHz	TP Gb/s	Area eff. $Gb/s/mm^2$	Energy eff. pJ/bit	Power dens. W/mm^2
LDPC	[4]	672	13/16	65	0.16	500	5.6	35	17.65	0.62
LDPC	[5]	672	802.11ad	28	0.78	470	18	23.6	18	0.41
LDPC	[6] 9 iter	672	13/16	28	2.8	220	160	57.1	6	0.32

- The referenced FEC architecture designs, and several others in the literature, comfortably achieve 802.11ad implementation requirements (throughput, power density, energy efficiency).
- Particular designs (e.g. [6]) achieve 160 Gb/s throughput, yet for a fixed code-rate and code block-length.
- Each design has a different communication performance (BERvsSNR).

State-of-the-Art 802.11ad FEC Implementations: 7 nm Projection [3]

Code	Ref.	Code length	Rate support	Process nm	Area mm^2	Freq MHz	TP Gb/s	Area eff. $Gb/s/mm^2$	Energy eff. pJ/bit	Power dens. W/mm^2
LDPC	[4]	672	13/16	7	0.003	2923 1000	32 11	11113 3832	1.9 1.9	21.1 7.2
LDPC	[5]	672	802.11ad	7	0.07	1410 1000	54 39	830 600	2.24 2.24	3.8 2.7
LDPC	[6] 9 iter 4 iter	672	13/16	7	0.2 0.1	660.0	480 480	2057 4100	1.5 0.6	3.1 3.1

- With 7nm nodes, substantial increase in area efficiency is anticipated.
- Multiple decoder instances of [4], [5], and a few decoder instances in [6] could well-exceed 100 Gb/s throughputs and approach 1 Tb/s.
- However, significant increase in power density is observed.

Observations on SoA High-throughput FEC Implementation Studies

- SoA implementation studies of 802.11ad LDPC codes demonstrate significant performance gaps in achieving practical ultra-high throughputs (100 Gb/s→Tb/s) **even when taking 7nm performance scaling into account**.
  - Silicon technology evolution to 7nm is expected to provide **sufficient area efficiency gain**.
  - **Power density will emerge as a binding constraint**, with an initial estimate of 10x-100x performance gap between the practical requirements and SoA FEC in 7nm.
  - **Energy efficiency will also be another constraint** with considerable performance gap.
  - **The clock frequency feasible value of 1 GHz** impose additional constraints on ultra-high throughputs – **extreme parallel and unrolled architectures are mandatory**.

Practical Tb/s FEC Implementation KPI Bounds – EPIC Project

New generation of FEC technology to enable ultra-high throughput (Tb/s) wireless communications in 7nm silicon.

EPIC FEC KPI bounds	
Area limit	10 mm²
Area efficiency limit	100 Gb/s/ mm²
Energy efficiency limit	~1 pJ/bit
Power density limit	0.1 W/mm²

- FEC decoder **throughput**: 1 Tb/s
- Practical FEC IP **area constraint** on a SoC: 10 mm^2
- FEC IP **power budget** to avoid heat removal issues: ~1 W

- Satisfy stringent communications performance (BER 10^{-6} to 10^{-12}) and flexibility requirements (in terms of e.g. code rates, block length)
- Focus on: **Turbo Codes, LDPC Codes, and Polar Codes.**

Where We are Today in EPIC Project towards 1 Tb/s [7]

OVERVIEW ON IMPLEMENTATION PROPERTIES

Code	Decoding algorithms	Parallel vs. serial	Locality	Compute kernels	Transfers vs. compute
Turbo code	MAP	serial/iterative	low (interleaver)	Add-Compare-select	compute dominated
LDPC code	Belief propagation	parallel/iterative	low (Tanner graph)	Min-Sum/add	transfer dominated
Polar code	Successive cancelation/List	serial	high	Min-Sum/add/sorting	balanced

28nm low V_t FDSOI Technology, worst case PVT, after Place & Route

Code	Blocksize [bit]	Code rate	Frequency [MHz]	Throughput [Gbit/s]	Area [mm^2]	Power [mW]	Area efficiency [Gbit/s/mm^2]	Energy efficiency [pJ/bit]
Turbo code (4 iter)	128	1/3	800	102	23.6	-	4.34	-
LDPC code (9 iter)	672	13/16	400	268	2.8	1500	95.7	5.6
LDPC code (4 iter)	672	13/16	400	268	1.3	700	215	2.5
Polar code	1024	1/2	746	764	2.95	3300	259	4.4

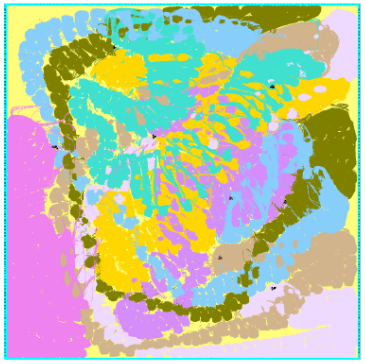

Fig. 1. 102 Gbit/s Turbo code decoder, area 23.61 mm^2

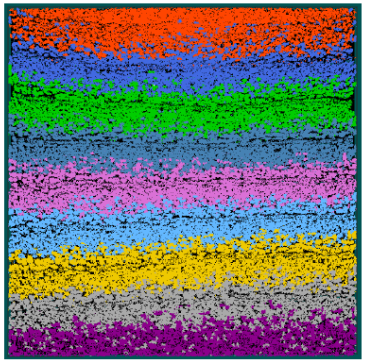

Fig. 2. 268 Gbit/s LDPC code decoder, area 2.8 mm^2

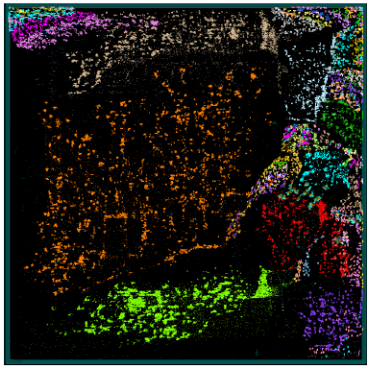

Fig. 3. 764 Gbit/s Polar code decoder, area 2.95 mm^2

Challenges for Tb/s Throughput Decoders

Architectural approach

- "Unrolling" of iterations (Turbo Code MAP, LDPC belief propagation).
- "Flattening" of Polar Factor Tree traversal (SC algorithm).
- Heavy pipelining and spatial parallelism.

Good news

- Throughputs beyond 100 Gbit/s are feasible for all three code classes.

Bad news

- Limited to small block sizes (all three codes) and small number of iterations (Turbo, LDPC) → degrades the communications performance.
- Suffers from limited flexibility in block lengths (all three codes), varying number of iterations (Turbo, LDPC) and code rate flexibility (LDPC, Polar).
- Pipelining increases the latency.
- Power density in the order of 1 W/mm^2 is far too high for air-cooled package.

Observations for Tb/s Throughput Decoders

Comparison related to implementation efficiency

- LDPC and Polar code decoders outperform Turbo Code decoder.
- LDPC and Polar code decoders have similar implementation efficiencies.

Communications performance matters!

- Depends on code, block length, code rate and decoding algorithm.
- Code impacts decoder complexity; e.g. position of frozen bits for Polar code decoder, structure of H matrix for LDPC code decoding.

⇒ A comparison based only on communication performance makes just as little sense as a comparison only on implementation level.

⇒ Communication and implementation performance have to be jointly considered.

Design Trade-Offs for Efficient Design

- V_{dd} downscaling of high throughput decoders → Decreases throughput but largely improves energy efficiency.
- Decrease decoder parallelism for LDPC belief propagation algorithm → Decreases throughput but improves flexibility.
- More complex decoding algorithms: E.g. SCL for Polar code decoding → Improves communications performance, but decreases throughput, area and energy efficiency.
- Hybrid decoders and concatenated codes: Combination of high throughput and high performance decoders, e.g. Majority-Logic and successive cancellation in Polar codes, inner and outer codes.

Communications Performance Comparison: LDPC vs Polar Codes

- FEC classes evaluated:
  - **802.15.3d LDPC**: Length-1440, Rate=11/15.
  - **Polar codes**: Length(L) = 2048, 4096, Rate=11/15. List-size=1,2 (CRC=8bits). Density (D) evolution based code design.

Observation:

- Polar code L=4096, List-size=1 and Polar code L=2048, List-size=2 are able to compete with LDPC codes at SNRs greater than 6dB.
- LDPC code experiences degraded performance at high SNRs (>6dB), a critical range for THz use-cases.

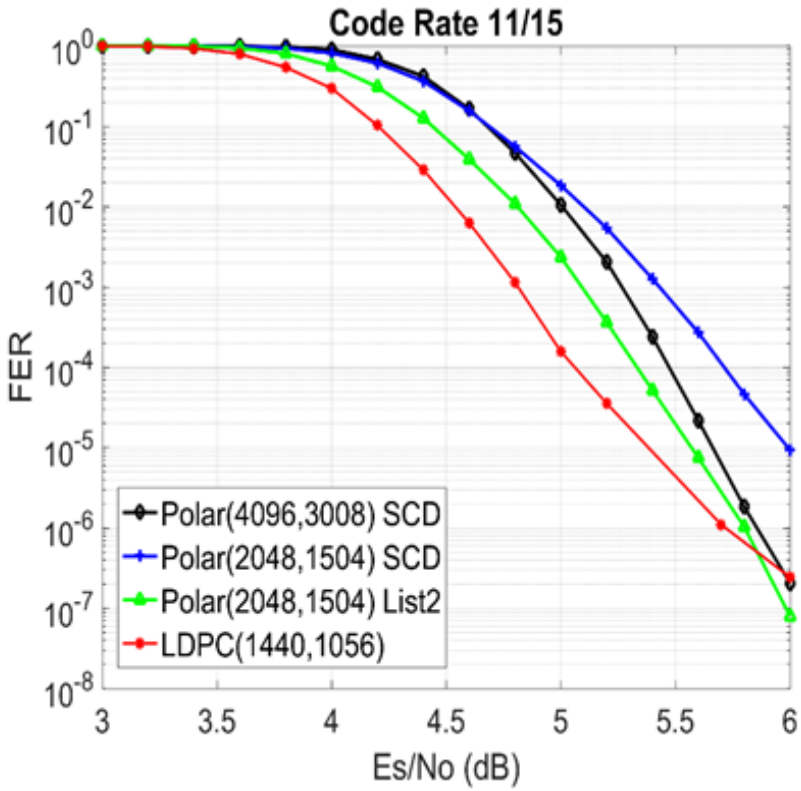

- Modulation: QPSK
- AWGN channel (BH/FH use-case in 802.15.3d study)

Conclusion

- New baseband and FEC solutions are necessary to materialize practical ultra-high throughput (>100 Gb/s) THz communications.
- Progress made in 100 Gb/s→1 Tb/s LDPC and Polar code implementations within THz use-cases practicality constraints.
  - Challenges remain including relatively small block lengths, number of iterations (LDPC and Turbo), and low code flexibility.
  - Power density is a key issue in ultra-high throughput THz!
- A joint study of the two domains, which is often done independently, is mandatory for ultra-high throughput THz communications:
  - New and improved code design with better communications performance
  - FEC architecture design satisfying THz implementation requirements
- The standard 802.15.3d codes lack a detailed implementation study in the literature. A necessary next step to explore their potentials.

EPIC Grant Agreement No. 760150

"The EPIC project has received funding from the European Union's Horizon 2020 research and innovation programme under grant agreement No 760150."

If you need further information, please contact the coordinator:

TECHNIKON Forschungs- und Planungsgesellschaft mbH
Burgplatz 3a, 9500 Villach, AUSTRIA
Tel: +43 4242 233 55 Fax: +43 4242 233 55 77
E-Mail: coordination@epic-h2020.eu

The information in this document is provided "as is", and no guarantee or warranty is given that the information is fit for any particular purpose. The content of this document reflects only the author`s view – the European Commission is not responsible for any use that may be made of the information it contains. The users use the information at their sole risk and liability.

REFERENCES

- [1] Koenig, S., et al. "Wireless sub-THz communication system with high data rate." *Nature Photonics* 7.12 (2013): 977.
- [2] K. Takano, et al., ISSCC2017, pp. 308–309, Feb. 2017.
- [3] O. Sahin, “A Preliminary 7nm implementation and communication performance study of SoA FEC classes for Tbps throughputs”, IEEE 802.15 THz IG contribution, Warsaw, Poland, May 7, 2018.
- [4] M. Li, et al., “An area and energy efficient half row-paralleled layer LDPC decoder for the 802.11ad standard,” in Proc. IEEE Workshop on Signal Processing Systems (SiPS’13), Taipei City, Oct. 2013, pp. 112–117.
- [5] M. Li, J. W. Weijers, V. Derudder, I. Vos, M. Rykunov, S. Dupont, P. Debacker, A. Dewilde, Y. Huang, L. V. der Perre, and W. V. Thillo, in Solid-State Circuits Conference (A-SSCC), 2015 IEEE Asian, 2015, pp. 1–5.
- [6] S. Scholl, S. Weithoffer, N. Wehn, “Advanced Iterative Channel Coding Schemes: When Shannon meets Moore”, in 9th International Symposium on Turbo Codes and Information Processing, pp. 406-411, Invited Talk, 2016, Brest.
- [7] C. Kestel, M. Herrmann, N. Wehn, “When Channel Coding Hits the Implementation Wall”, to appear in the proceedings of International Symposium on Turbo Codes & Iterative Information Processing 2018, Hong Kong.

Integration of fiber-optics/THz technologies

Colja Schubert, Robert Elschner, Carlos Castro

Fraunhofer Heinrich Hertz Institute

Tutorial THz Communications

November 2018

Introduction

- THz bandwidth is adequate to fit contemporary optical transponder solutions → 100/200 Gb/s
- Main question: how can optics and THz technologies be integrated?

Network scenarios

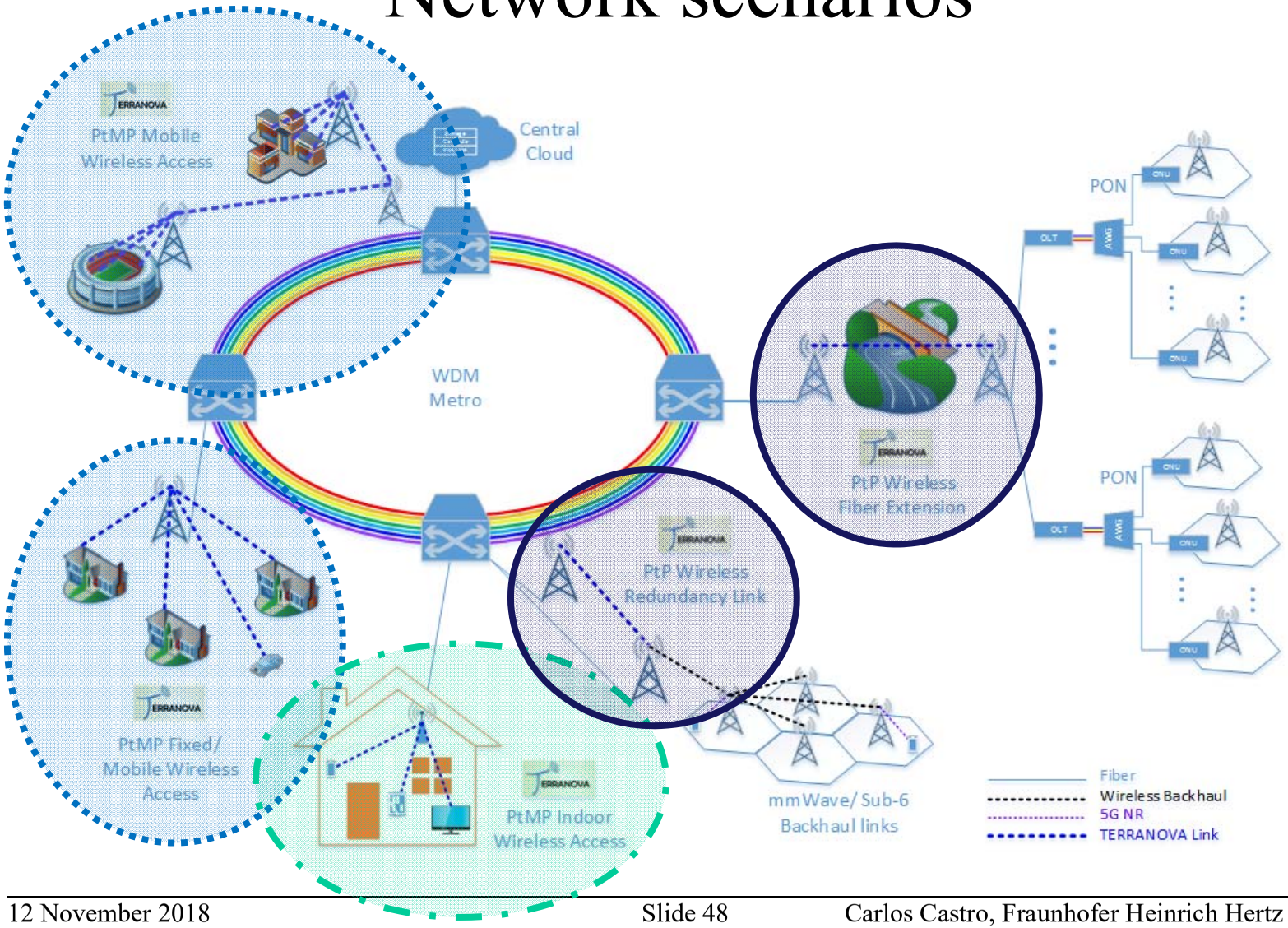

System architectures

- Indoor quasi-omnidirectional
- Point-to-Point
- Point-to-Multipoint

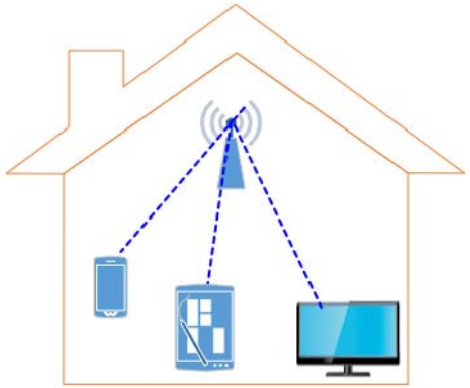

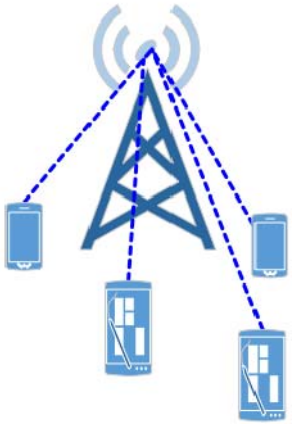

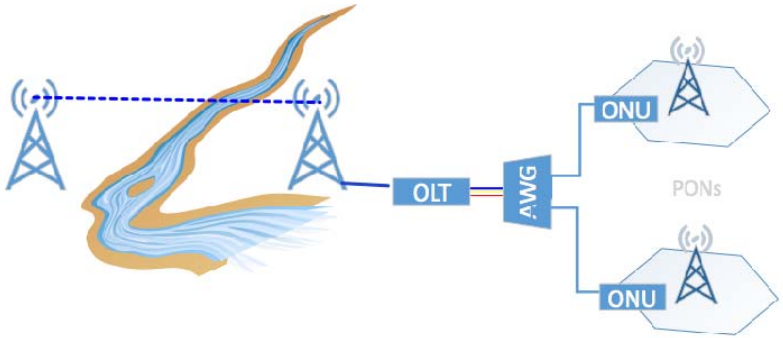

Point-to-point systems

- Stationary/static outdoor connections that require to cover long distances and to support large data rates

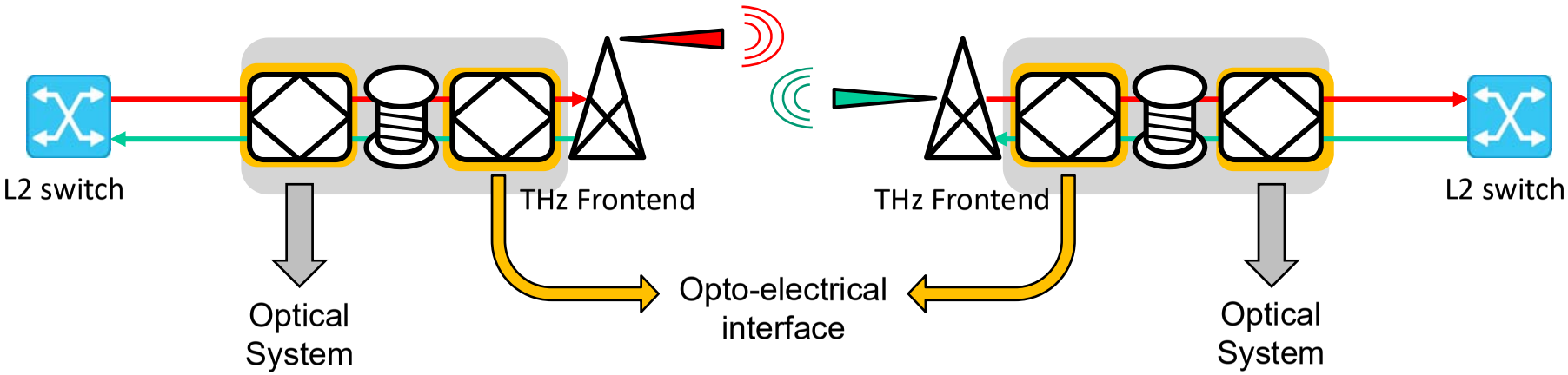

- Target: 1 Tb/s over 1 km wireless link

Optical transceivers

Aspect	CFP	CFP2	CFP8	QSFP28	QSFP-DD
W x L x H [mm]	82 x 145 x 14	41.5 x 106 x 12.4	40 x 102 x 9.5	18.4 x 72 x 8.5	18.35 x 58.26 x 8.5
Power Class	8 W 16 W 24 W 32 W	3 W 6 W 9 W 12 W 15 W 18 W	4 W 8 W 12 W 16 W 20 W 24 W	1.5 W 2 W 2.5 W 3.5 W 4 W 4.5 W 5 W	1.5 W 3.5 W 7.0 W 8.0 W 10 W 12 W 14 W > 14 W
Electrical interface	148 pins 10x10G / 4x25G	104 pins 10x10G / 4x25G 8x25G / 8x50G	124 pins 16x25G / 8x50G 4x100G	38 pins 4x25G	76 pins 8x25G / 8x50G
Application	C-band DCO 100G Single carrier for metro/long-haul	C-band ACO 100G → 200G Reach: tens of meters to thousands of meters	Reach: from tens of meters to couple of kms Equipment interconnection	CWDM4: 4λ x 2km 100G LR: 10 km SR: tens of meters E standard: 40 km	SR: tens of meters Data center intra-connect

Digital systems

- Intensity modulation/Direct detection (IM/DD) systems
  → Information is encoded in different amplitude levels, which are detected by a simple photodiode at Rx
- Subsystems (links) are recognizable along the transmission line

- Advantages: cost-effective
- Disadvantages: reach and data rate

- Most common form-factors: SFP+, QSFP28, XFP, CFP2

Digital system configuration

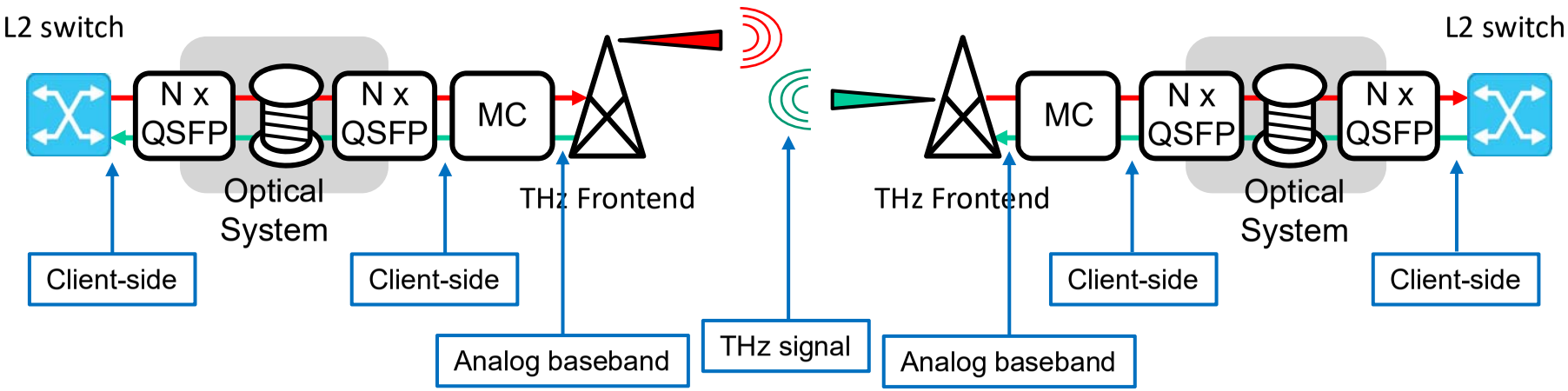

- Multiple QSFP modules act as interfaces between optics and THz
- Media converter (MC) aggregates channels → TDM/FDM
- Data rates: 10 Gb/s → 200 Gb/s

- Challenges: compliance of the media converter with the channel specification (client-side interfaces)

Coherent transmission systems

- Coherent detection is a technique that involves encoding the data both in the amplitude and phase of the optical signal
- Advantages: high spectral efficiency, high data rates, and superior performance
- Disadvantages: more expensive than IM/DD transmission
- Form-factors that currently support coherent transmission are CFP/CFP2 (either DCO or ACO)

Coherent system configuration

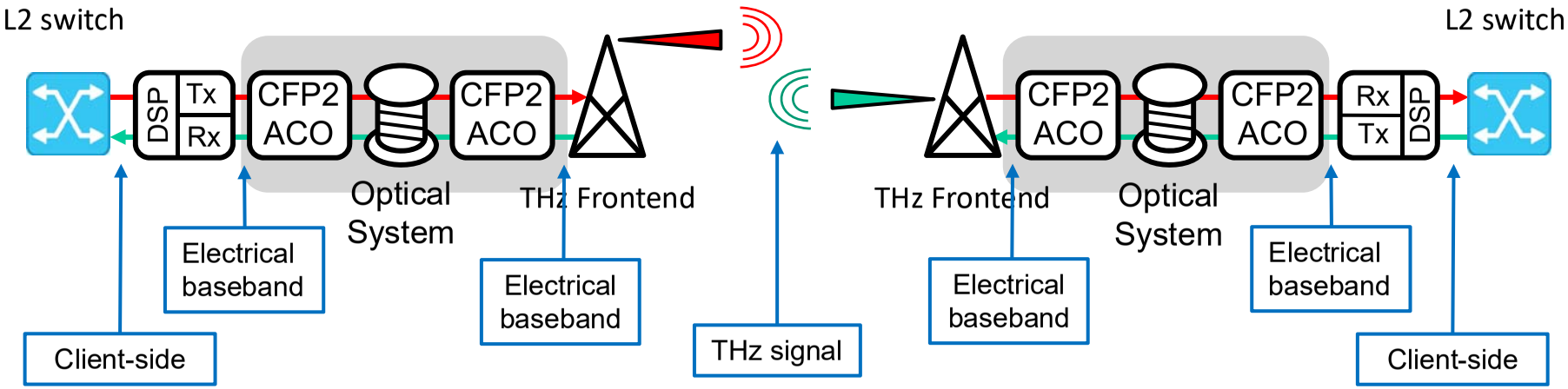

- Standard CFP2-ACO modules act as interfaces between optical and electrical domains
- Transparency of the THz link ('fiber extension')
- Data rates: 100 Gb/s → 500 Gb/s

Good bet to reach the target 1 Tb/s transmission

- Challenges: joint impairment mitigation
  → phase noise, I/Q imbalances, SNR

Overview system configurations

Advantages

Digital systems	Coherent systems
Simple transceiver design	“High” data rates (100-500 Gb/s)
Adjustments based on link conditions	Long-haul optical transmission is possible
Cost-effective	Improved performance (DSP)

Disadvantages

Digital systems	Coherent systems
Short optical distances	Joint impairment mitigation
“Low” data rates (10-200 Gb/s)	Transparent system doesn’t allow to adjust transmission parameters
Interaction media converter/client-side interface	More expensive and complicated systems

Summary

- Applications can be summarized in three large groups: indoor quasi-omnidirectional, point-to-multipoint, and point-to-point
- Interface between the optical domain and the THz elements is critical for a seamless integration of these technologies in the existing communication networks
- There are different approaches to construct an optical/THz system: digital configuration and coherent configuration
- Currently in the process of investigating THz transmission in combination with optical components

Conclusions and Outlook

Thomas Kürner

Technische Universität Braunschweig, Germany

Conclusions

- Frequency bands beyond 275 GHz offer a huge potential to implement wireless communication systems with data rates targeting of more than 100 Gbit/s
- A first 300 GHz standard @ IEEE 802 has been completed in 2017
- Activities targeting allocation of spectrum beyond 275 GHz at WRC 2019 (AI 1.15)
- Ongoing projects towards THz Communications are covering the whole range from Semiconductor Technology (e.g. CMOS) to Physical Layer improvement (e.g. FEC) and Networking (e.g. integration of fibre with THz links)

THz Communications is a real option for wireless networks beyond 5G!

Outlook for IEEE 802 Standardisation

- The THz frequency range may provide various opportunities for the development of further standards or amendments targeting beyond 5G networks
- Examples are standards covering
  - Applications requiring beamforming
  - Systems targeting data rates in Tbps range
  - Seamless integration of fibre with THz wireless links

Project: IEEE P802.15 Working Group for Wireless Personal Area Networks (WPANs)

Submission Title: 300 GHz Channel Measurements in a Real Data Center - First Results
Date Submitted: 14 November 2018
Source: Thomas Kürner (Editor) **Company:** TU Braunschweig, Institut für Nachrichtentechnik
Address: Schleinitzstr. 22, D-38092 Braunschweig, Germany
Voice: +495313912416 FAX: +495313915192, E-Mail: t.kuerner@tu-bs.de
Re: n/a
Abstract: This document presents first results form a 300 GHz channel measurement campaign carried out in real data center within the EU Horizon 2020 project TERAPOD.

Purpose: Information of the Technical Advisory Group THz

Notice: This document has been prepared to assist the IEEE P802.15. It is offered as a basis for discussion and is not binding on the contributing individual(s) or organization(s). The material in this document is subject to change in form and content after further study. The contributor(s) reserve(s) the right to add, amend or withdraw material contained herein.
Release: The contributor acknowledges and accepts that this contribution becomes the property of IEEE and may be made publicly available by P802.15.

300 GHz Channel Measurements in a Real Data Center - First Results

Johannes Eckhardt, Tobias Doeker, Thomas Kürner

Technische Universität Braunschweig
Institut für Nachrichtentechnik
Germany

Outline

- Introduction to H2020 TERAPOD
- Data Center Application Scenarios for 300 GHz wireless links
- Measurement Set-Up
- First Measurement Results
- Conclusion and Outlook

Horizon 2020 TERAPOD -Terahertz based Ultra High Bandwidth Wireless Access Networks

- TERAPOD is one of the six funded projects from the Horizon 2020 ICT-Call-09-2017 on „Networking Research beyond 5G“
- Project duration 2017-2020
- 11 Partners from Ireland, Spain, Portugal, Germany and the United Kingdom
- Web Page: www.terapod-project.eu

Vision and Objective of TERAPOD

VISION: Push the boundaries of the THz communications, through the combination and integration of multiple THz technologies, paving the way towards future Tb/s wireless communications.

Objective: The overall TERAPOD **objective** to investigate and demonstrate the feasibility of ultra-high bandwidth wireless access networks operating in the Terahertz (THz) band.

Demonstrated within the operational setting (Dell EMC Data Centre) and will significantly progress innovations across the full communications protocol stack.

THz components and modules	THz devices and links	Characterization and modeling	Communication protocols and networking

TERAPOD Concept

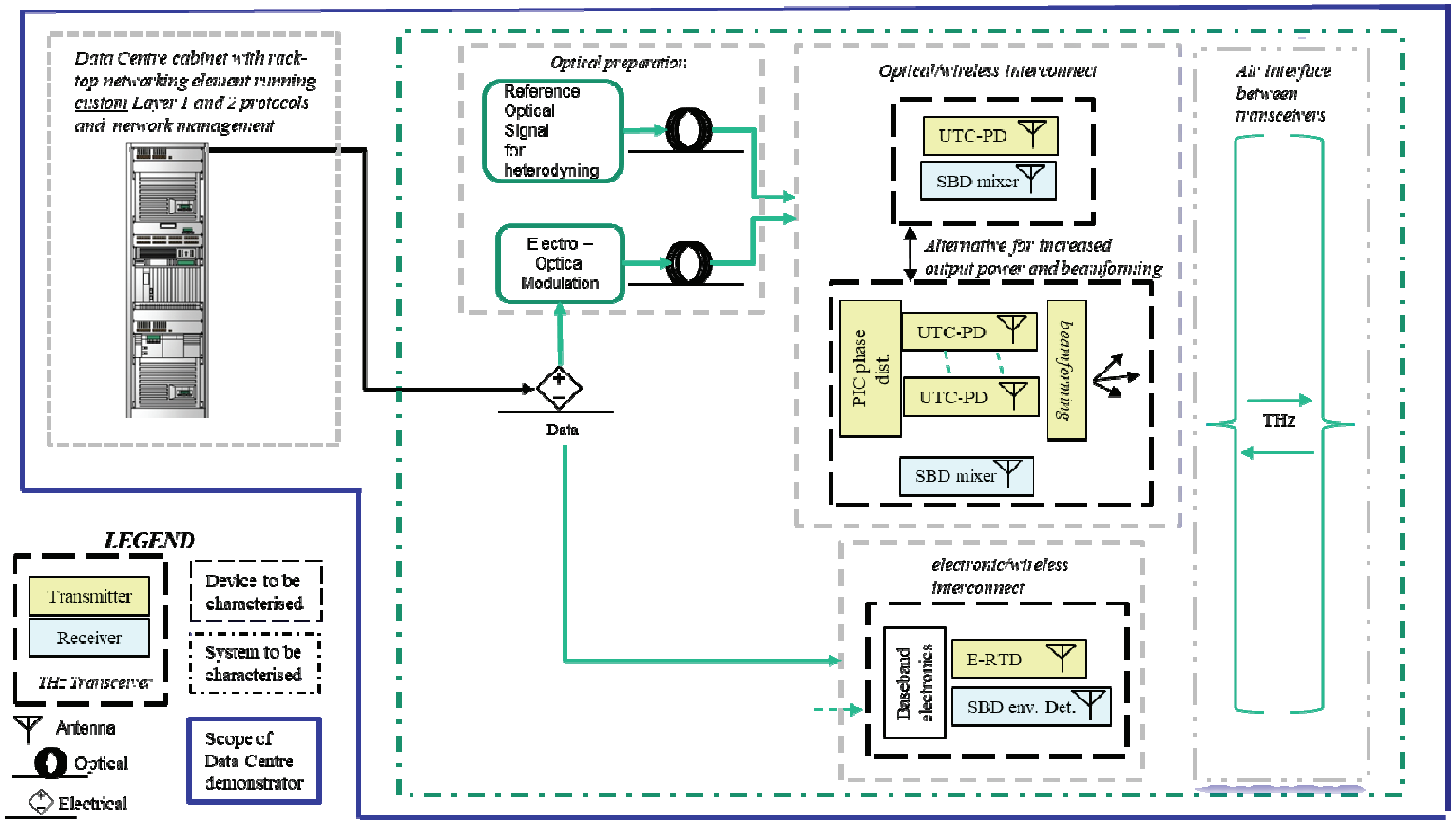

TERAPOD Target Scenario– Data Centre

- Short range (1-10 m)
- High data rates (1-over 40 Gbps)
- Dense Topology
- Protocols/integration
- Low mobility
- Limited sensitivity to cost

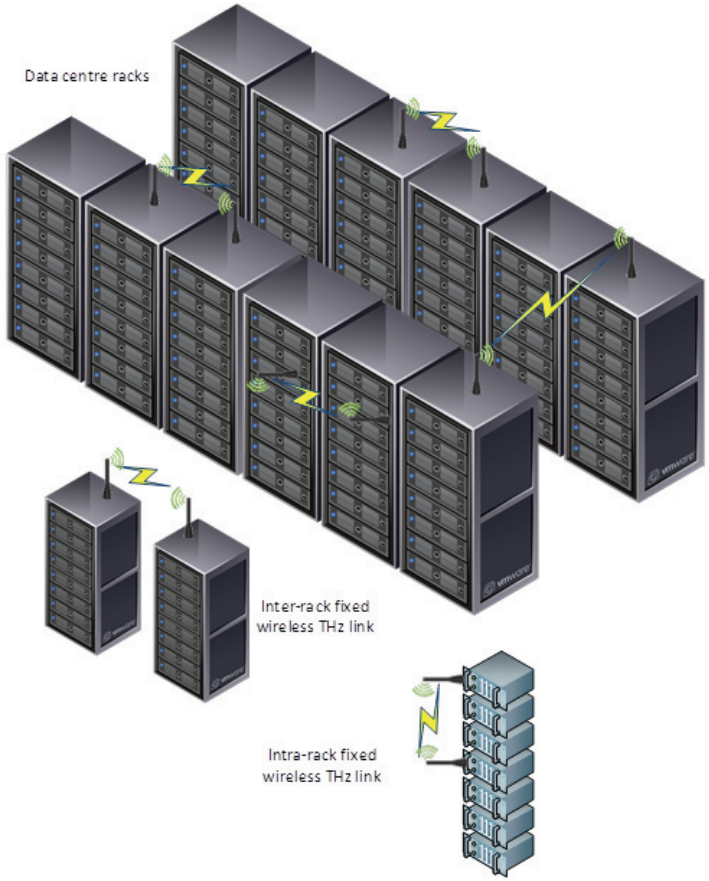

Why 300 GHz Channel Measurements in a real Data Center?

- In the literature no channel measurement campaign at 300 GHz in a real data center are reported up to now,
- The TG3d Channel Model (Channel Modeling Document – CMD, doc. 15-14-0310-17-003d) is based on ray tracing simulation in an ideal data center only
- Different link types have been defined in the CMD
- The measurements presented in this document are covering these and other configurations

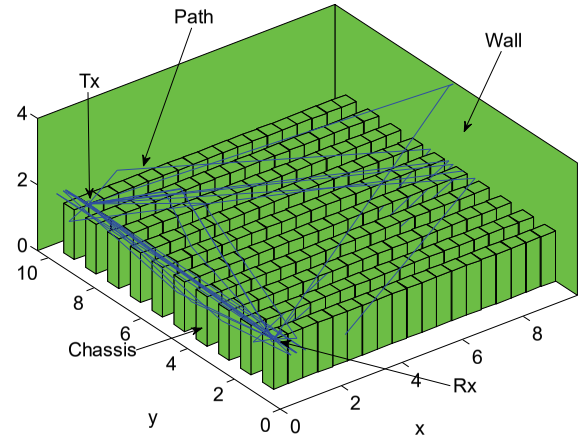

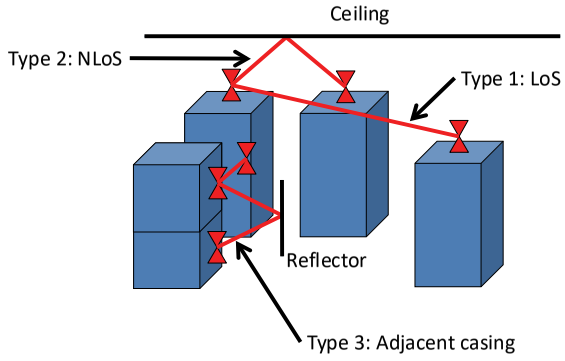

souce: 15-14-0310-17-003d

Measurement Equipment

- TUBS's time domain channel sounder has been used for the measurments
- Allows Measurement of the time-variant impulse response with a PRBS signals (sequence M= 12)
- Carrier frequency: 304,2 GHz
- Bandwidth: approx. 8 GHz
- Use of rotational units to measure spatial channel characteristics

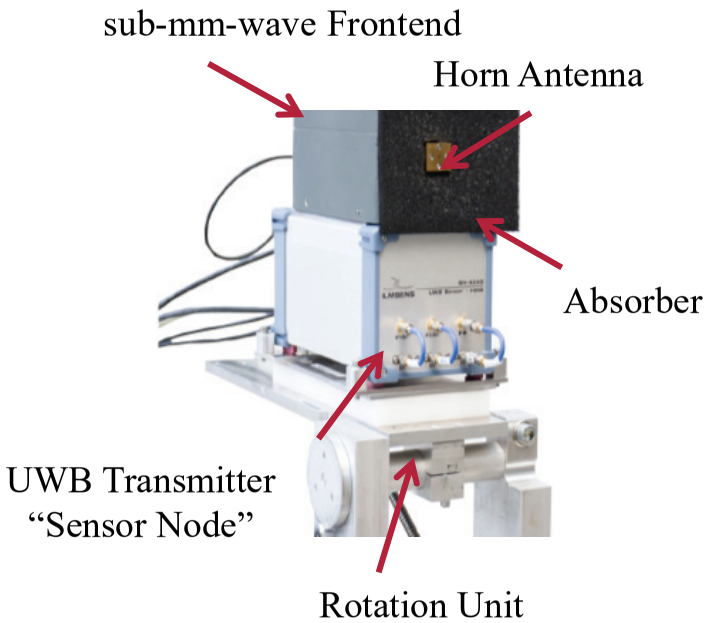

For more information on the measurement equipment see:
S. Rey, J. Eckhardt,. Peng, K. Guan, T. Kürner, Channel Sounding Techniques for Applications in THz Communications, 2nd Workshop on THz Communications (THZCOM) at the 9th International Congress on Ultra Modern Telecommunications and Control Systems, 8 November 17, 5 pages

Initial Measurement Campaign within the Research Data Centre of Dell/EMC, Cork Ireland

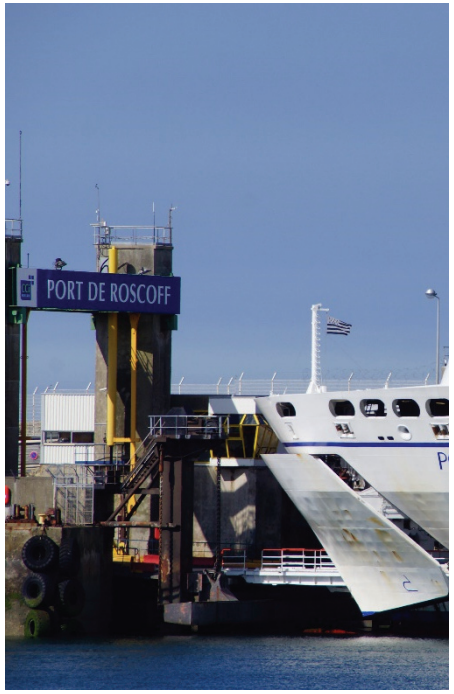

Categorisation of THz communication scenarios

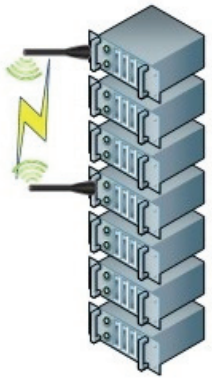

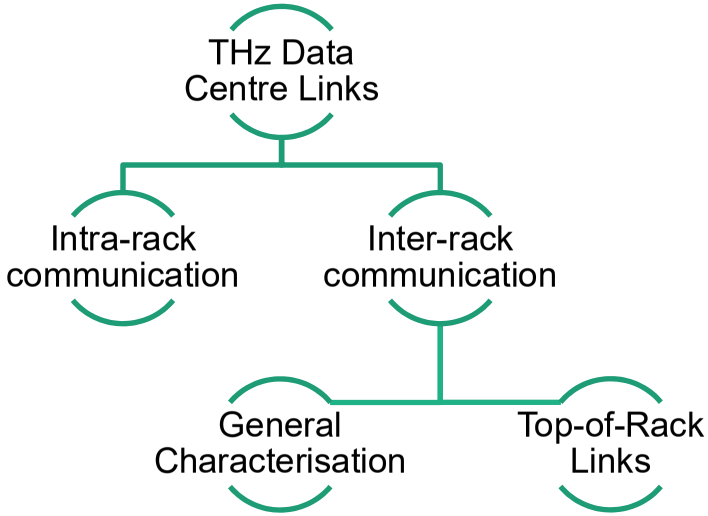

Measurement campaign – Inter-rack scenarios
General characterisation

Rotational measurement

Point-to-point measurement

Measurement campaign – Inter-rack scenarios Top-of-Rack

Rotational measurement

Point-to-point measurement

Measurement campaign – First Results

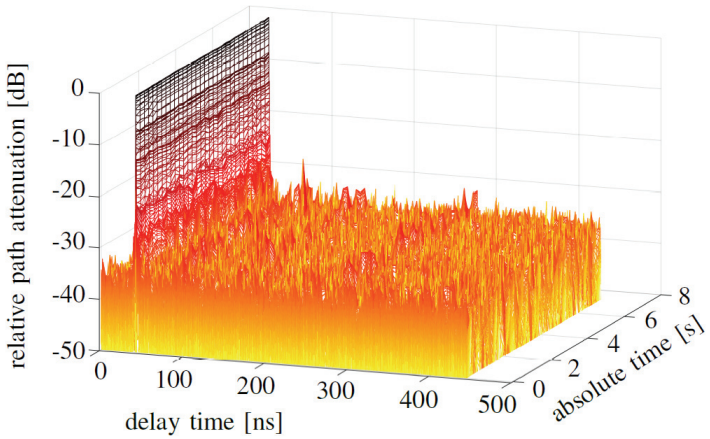

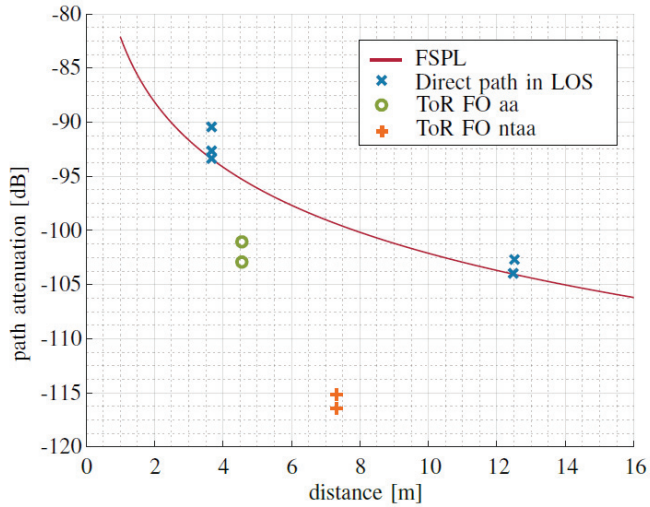

- Channel is time invariant
- Measurements agree with theoretical analysis

Measurement campaign – First Results

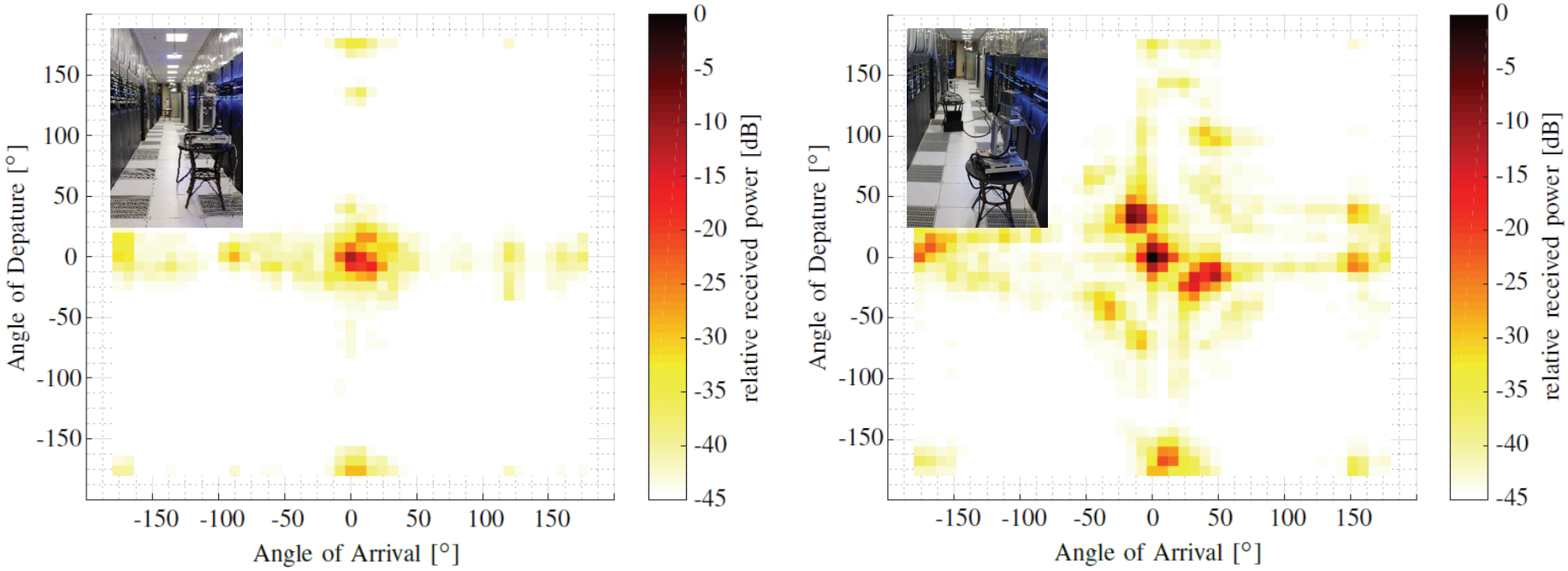

Power Angular Spectrum of General Characterisation Measurement;
left: long distance between Tx and Rx; 12,5 m
right: short distance between Tx and Rx: 3,6 m

Measurement campaign – First results

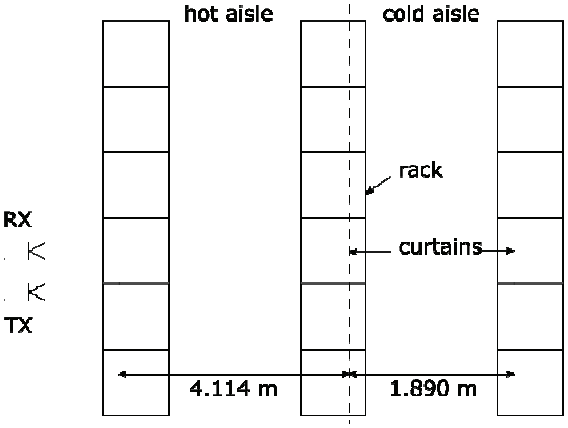

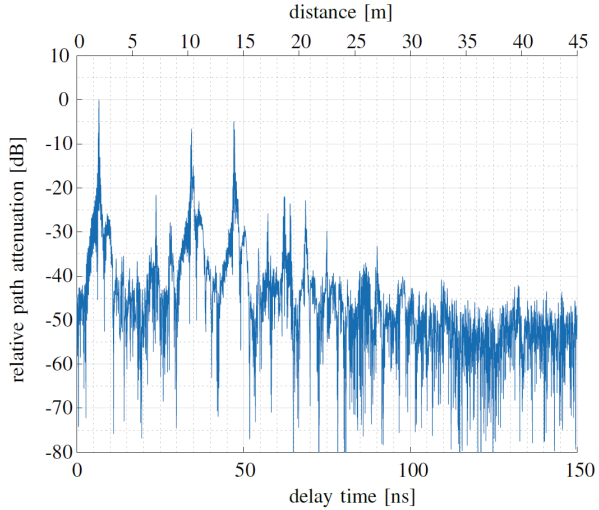

Reflection measurement agrees with the environment's geometry

Conclusion and Outlook

- First results from a 300 GHz channel measurement campaign in the Research Data Center of Dell/EMC has been presented.
- Results indicate, that measured propagation effects can be traced back to the geometry of the scenario
- Next steps:
  - Evaluation and assessment of the complete measurement campaign (including measurements in a second data center)
  - Calibration of ray tracing algorithm

- The TERAPOD project has received funding from the European Union's Horizon 2020 research and innovation programme under grant agreement No 761579