SCALABLE mmW ARCHITECTURE AND IMPLEMENTATION TOWARDS THz SOLUTIONS

3TTCW, 12th March 2021

Eric Mercier

APPLICATION PERSPECTIVES in TELECOM

- **5G current deployment**
  - NR - FR1 : below 6 GHz frequency bands , mainly **3.5 GHz** today
  - NR - FR2 : mmW frequency bands, **26 GHz – 29 GHz** / **38 GHz – 40 GHz**

- **Addressed challenges**
  - FR1 : 100 MHz bandwidth – up to 400 MHz aggregated
  - FR2 : 400 MHz bandwidth – up to 800 MHz aggregated

- **Beyond current 5G … much larger bandwidth**
  - New FR3 : V-band (**60 GHz**), W-band (above **91 GHz**)
  - New FR4 : D-band (**120 GHz to 170 GHz**)
  - And forthcoming **285 GHz – 300 GHz** trials

- **Much higher throughputs : target above 100 Gbps**

  … and mandatory consideration of a power hungry wideband process

USE CASE FOR mmW / SUB-THz AT A GLANCE

*HD-LC^3 : High Datarate – Low Complexity/Cost/Consumption

Extreme capacity xHaul

- **Dense massive MIMO network**
- **Cell free network architecture**
- Massive could & edge computing
- Enhanced broadband fixed access

- 200+ meters range
- Indoor/Outdoor coverage
- Cost effective solution
- Weak energy constraints

B5G
100Gbps
0,1 ms latency

6G
1 Tbps
0,01 ms latency

Mobility for mmWave

- Mobile Access
- **Wireless LAN, Kiosk, digital shower**
- Enhanced immersive experience
- mmW Industrial-IoT

- 20+ meters range in mobility
- Constraint integration
- Constraint power consumption - Rx
- DL weak energy constraints

B5G
10+Gbps per cell

6G
100 Gbps per cell

HD-LC^3

- Connector less/chip communication
- **RF over Fiber**
- **Server farm network**
- mmWave I-IoT network

- 0,1 to 20 meters range
- Strong energy and cost constraints
- Strong integration constraint

Short range
10+Gbps P2P
2+m range

I-Iot
1-10 Gbps
20+m range

A SCALABLE APPROACH ENVISIONING UPGRADES

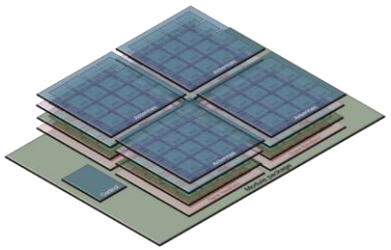

From D-BB to 60 GHz, up to 140 GHz even 300 GHz

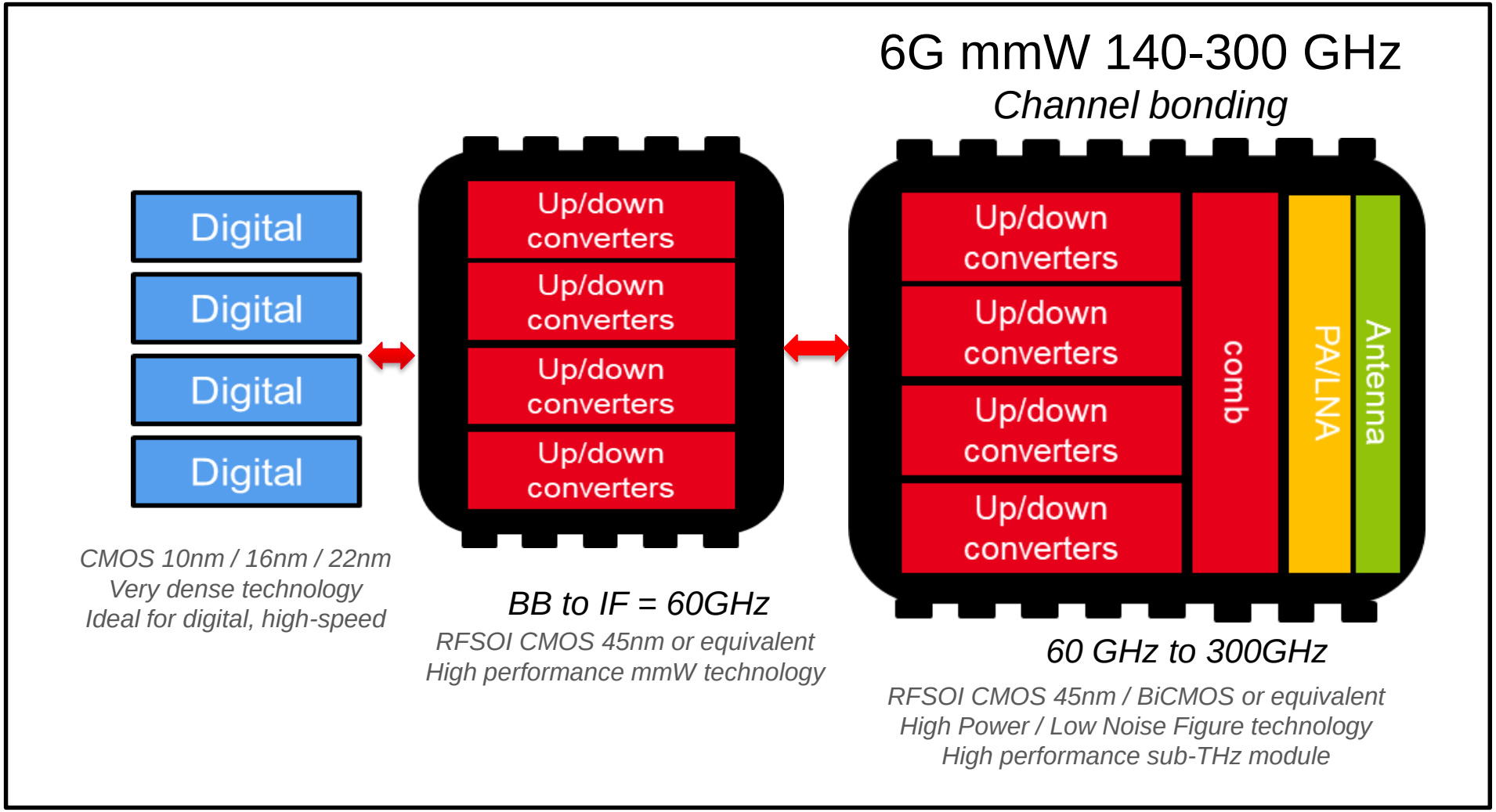

USING THE D-BAND TO ITS FULL CAPACITY

- **Frequency plan in a very wideband domain**
  - Multiple sub-bands & channels to be considered
  - Classical approach for transceiver would :
    - Use **multiple Local Oscillator**
    - Consider very **wideband** Rx & Tx chain
  -

… but a huge potential in D-Band

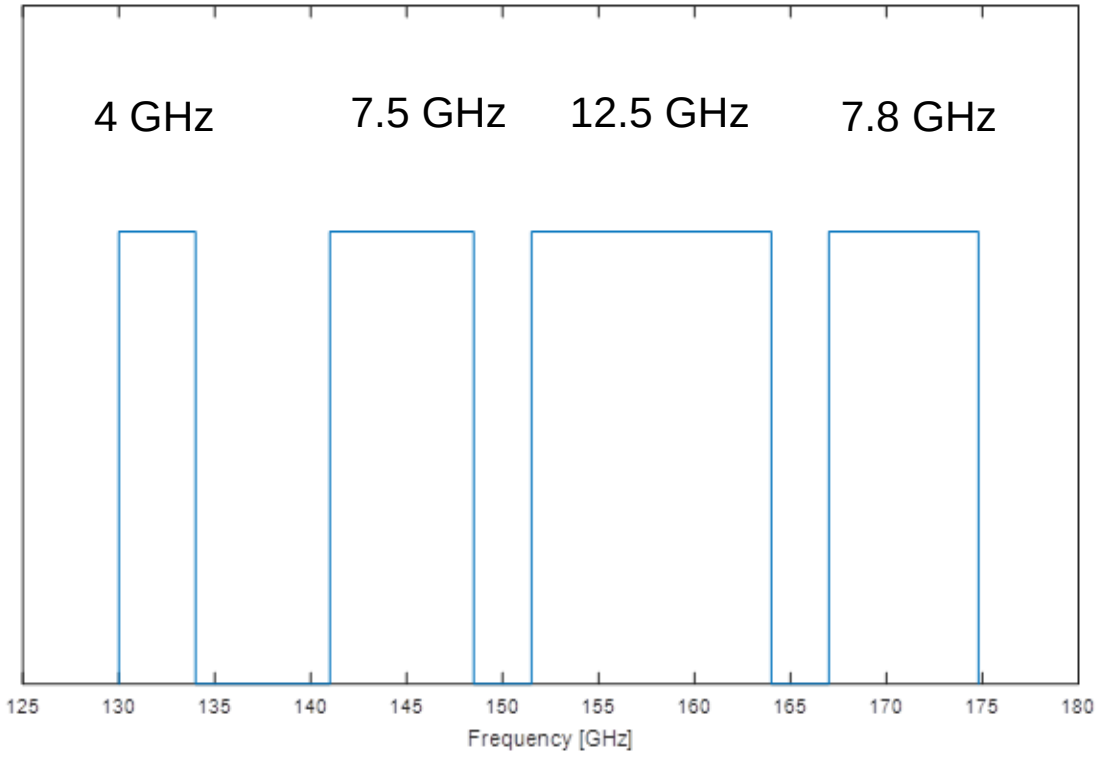

CHANNEL BONDING TRANSCEIVER ARCHITECTURE

Dedicated architecture making use of efficient frequency plan

- 4 Lanes with 4 sub-channels
  - 16 x channels are considered at BB level
  - **4 x IF at 60 GHz** build one lane
  - **4 x lanes** are recombined at D-band level
  - Passive recombination at PA level

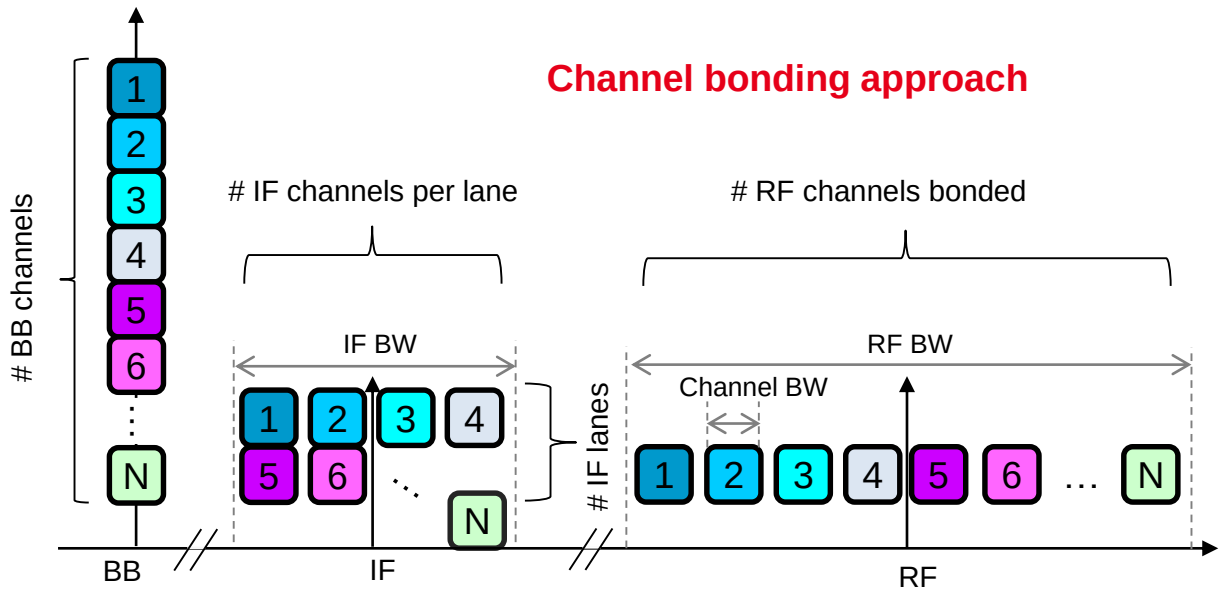

TRANSCEIVER IMPLEMENTATION

More to be unveiled

RFIC **2020 & 2021**

Dedicated architecture making use of efficient frequency plan

- Transceiver SoC for **100 Gbps** Wireless point-to-point links
  - A few meters of distance range
    - Output power is not the key target performance
  - Passive recombination at PA level
    - Best way for efficiency on Tx
  - 4 upconverters / downconverters for each lanes for each mmW path

Mandatory need for low phase noise

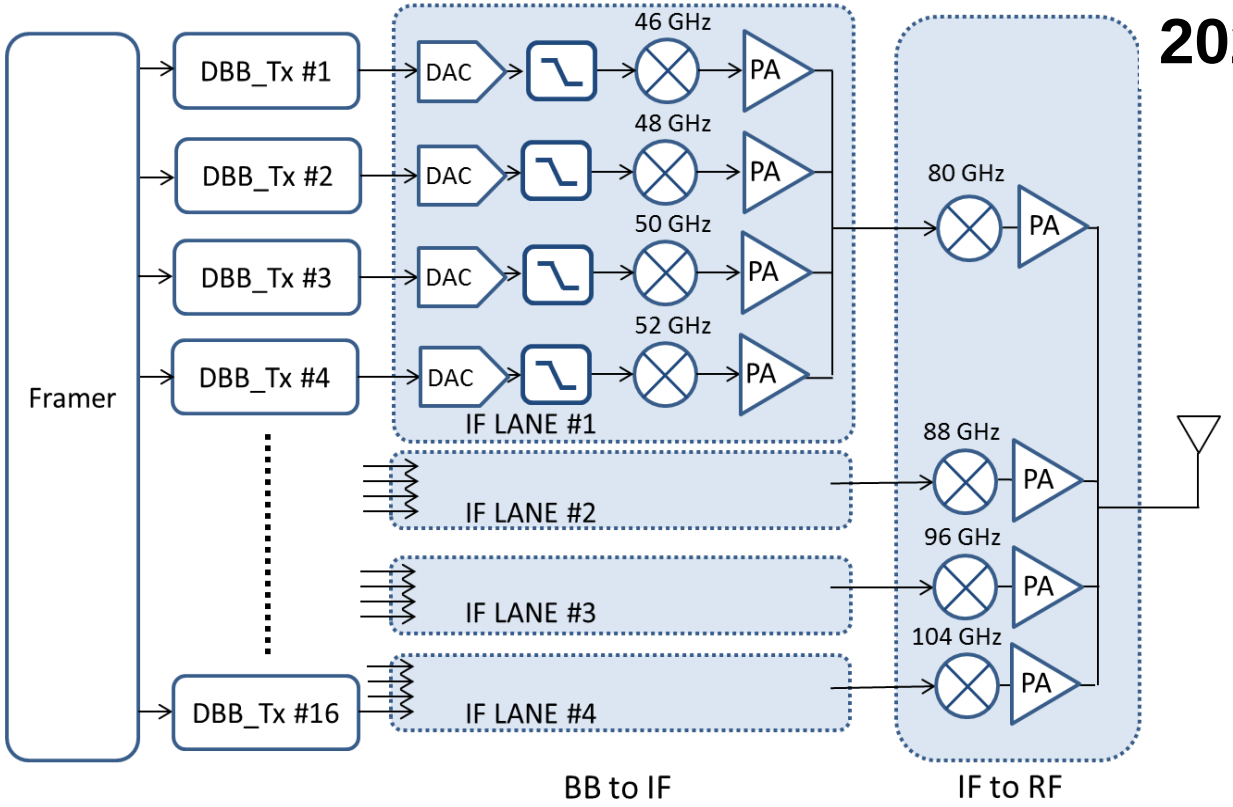

  - Architecture eventually avoiding **complex, power consuming ADC & DAC**

LOW PHASE NOISE mmW FREQUENCY SYNTHESIS

Multi-LO frequency generator

60 GHz / WiGig band LO generator example

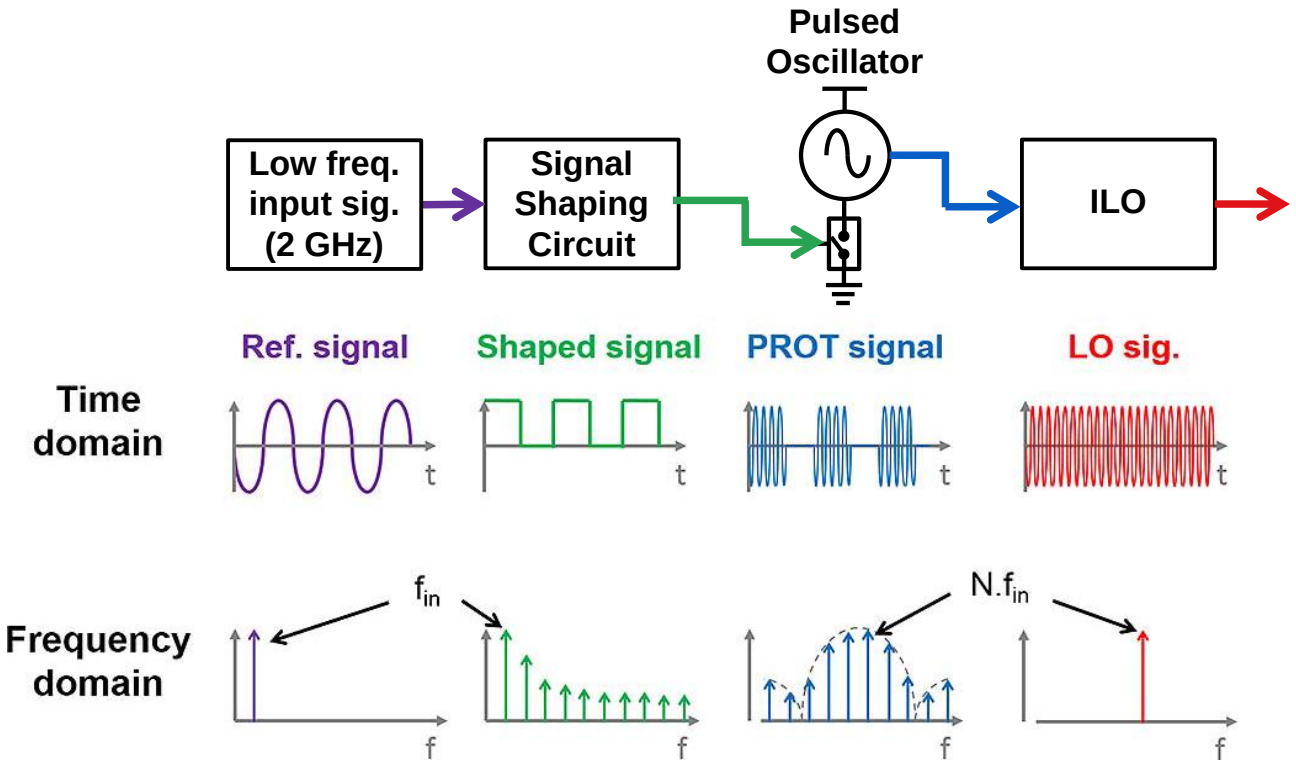

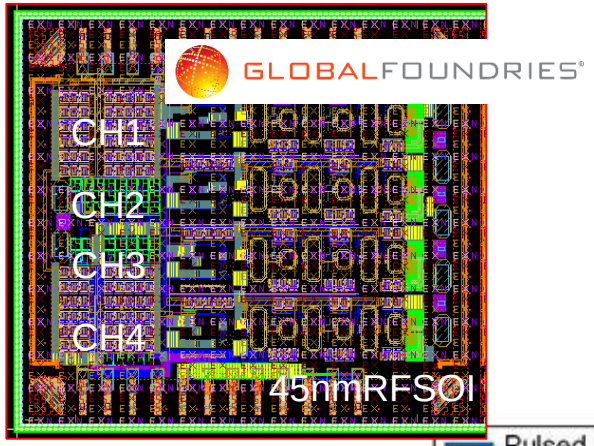

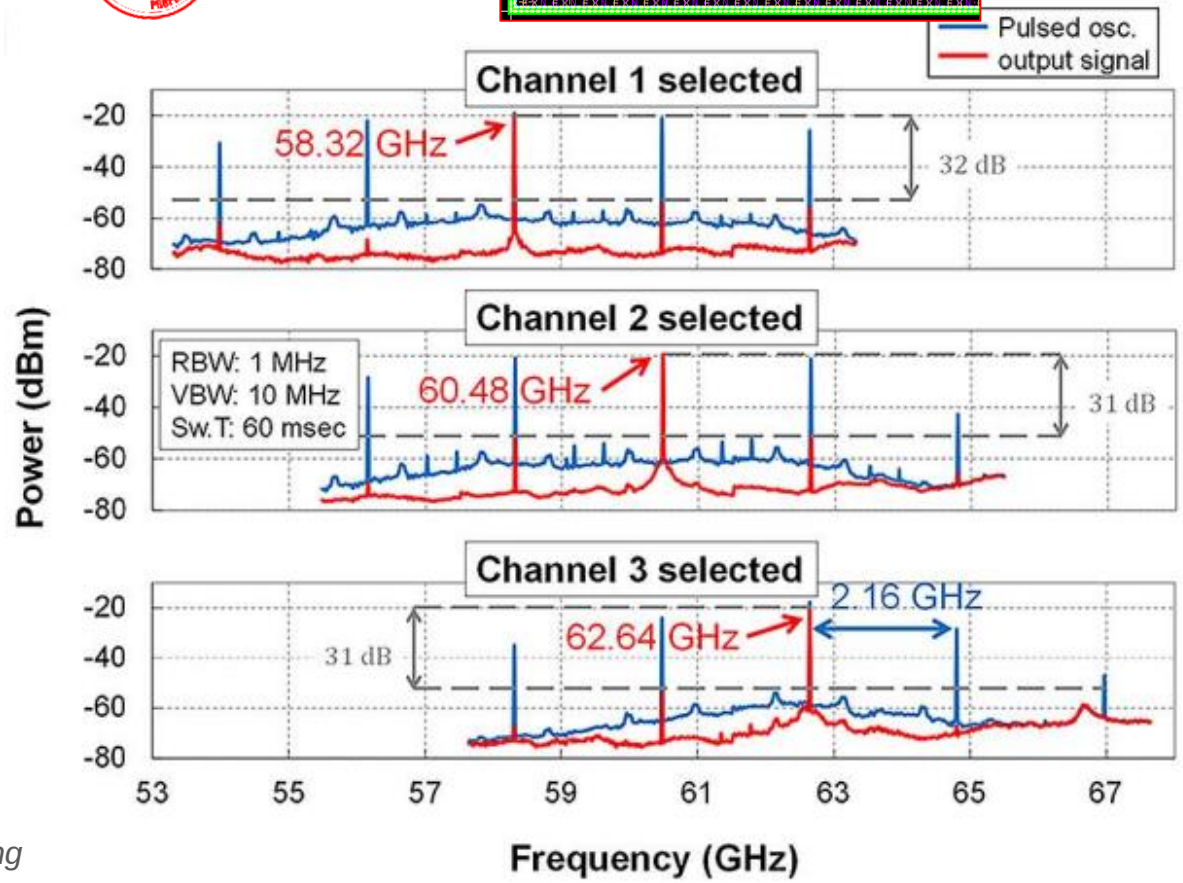

Alexandre Siligaris, José Luis Gonzalez-Jimenez, & altri "A Multichannel Programmable High Order Frequency Multiplier for Channel Bonding and Full Duplex Transceivers at 60 GHz Band," RFIC 2020.

CONFIDENTIAL

LOW PHASE NOISE mmW FREQUENCY SYNTHESIS

Multi-LO frequency generator

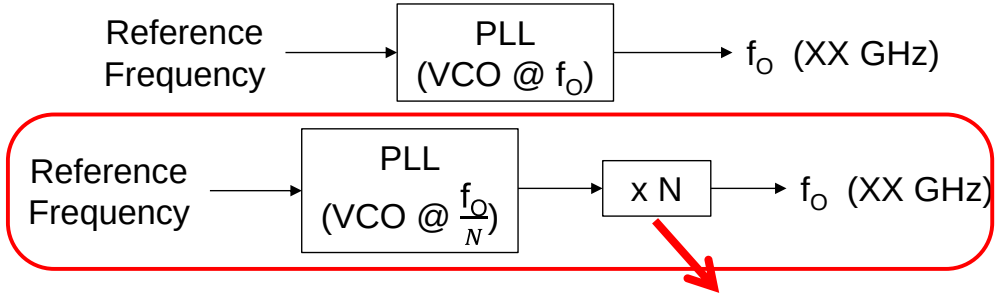

Benefits in terms of phase noise

$$PhN(S_{f0}) = PhN(S_{f0/N}) + 20\log_{10}(N)$$

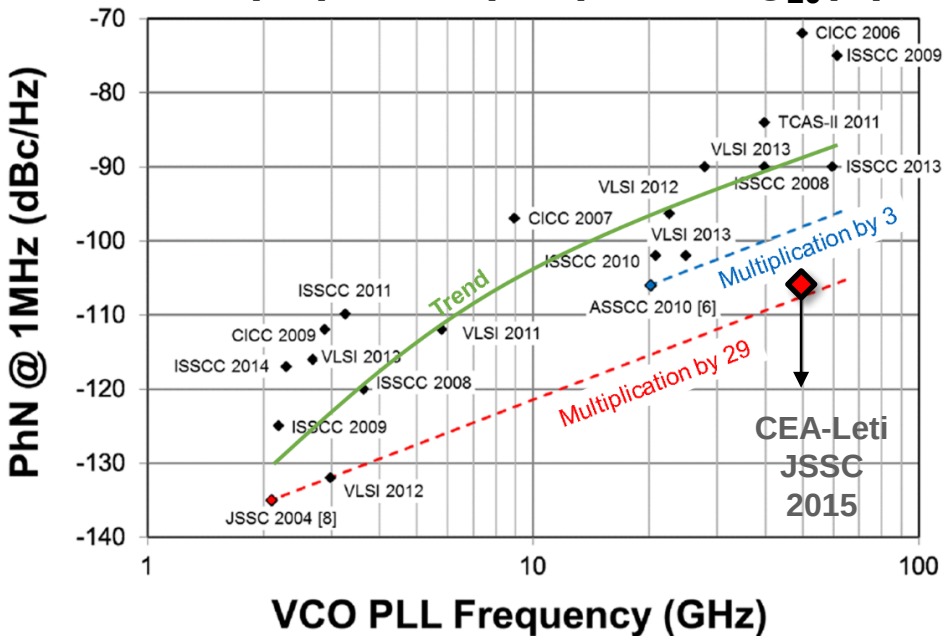

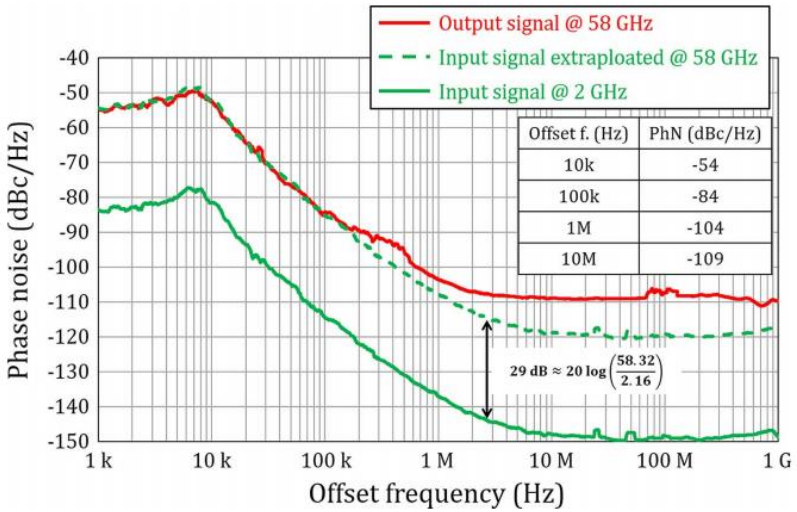

- Multiplying techniques **outperform** State-of-the-Art solutions in green

CONFIDENTIAL

HIGH-SPEED WIRELESS COMMUNICATIONS TRANSCEIVER - TRANSMITTER

Receiver - 108 Gbps / 64QAM / 10 channels

- Transposition of D-band to V-band Receiver
- 10 sub-channels are received simultaneously

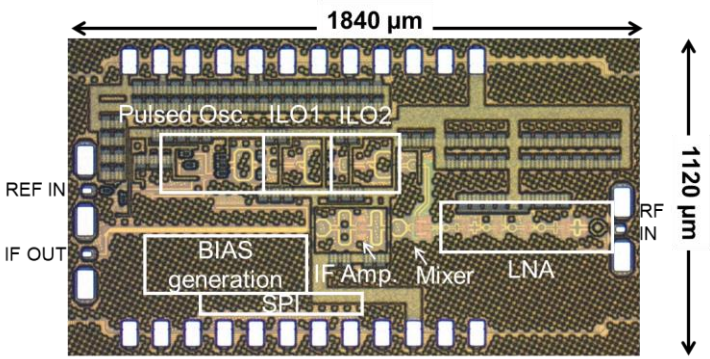

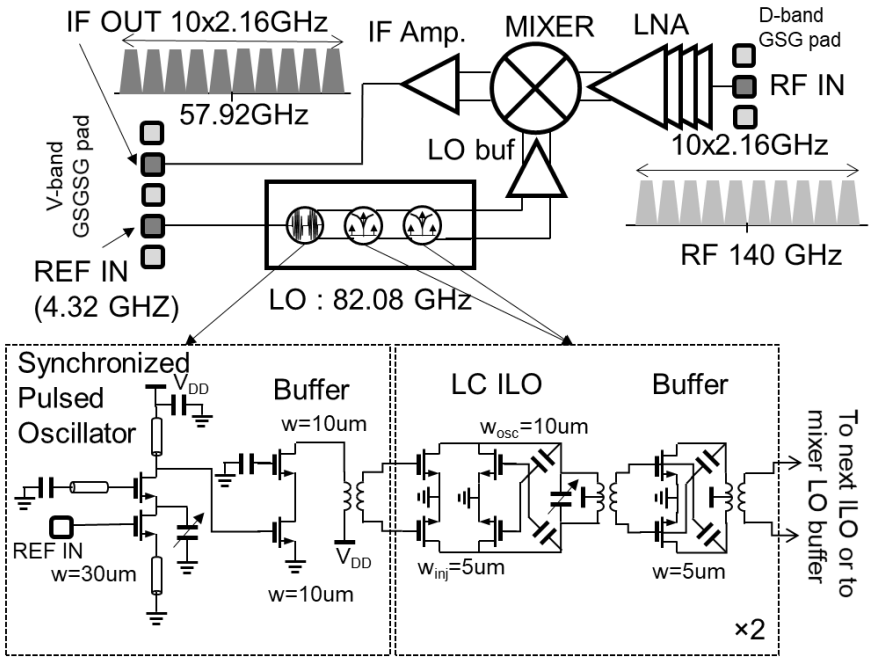

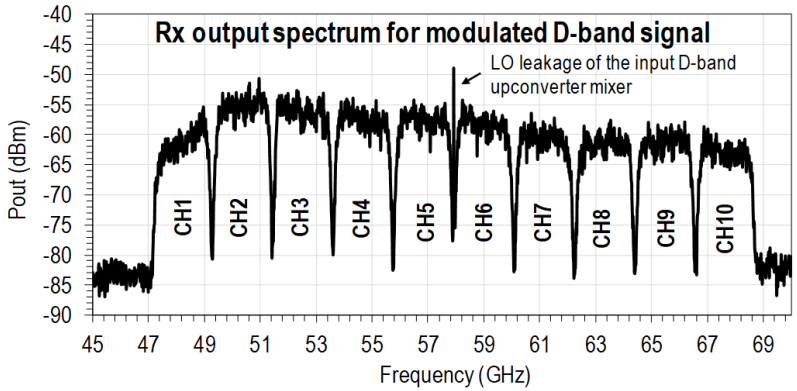

CH1	CH2	CH3	CH4	CH5	CH6	CH7	CH8	CH9	CH10
130.28GHz	132.44GHz	134.60GHz	136.76GHz	138.92GHz	141.08GHz	143.24GHz	145.40GHz	147.56GHz	149.72GHz
1.8Gbauds	1.8Gbauds	1.8Gbauds	1.8Gbauds	1.8Gbauds	1.8Gbauds	1.8Gbauds	1.8Gbauds	1.8Gbauds	1.8Gbauds
									
EVM=6.8%	EVM=6.0%	EVM=5.4%	EVM=5.4%	EVM=5.4%	EVM=5.5%	EVM=6.2%	EVM=6.5%	EVM=6.3%	EVM=6.6%
7.2Gb/s	7.2Gb/s	7.2Gb/s	7.2Gb/s	7.2Gb/s	7.2Gb/s	7.2Gb/s	7.2Gb/s	7.2Gb/s	7.2Gb/s
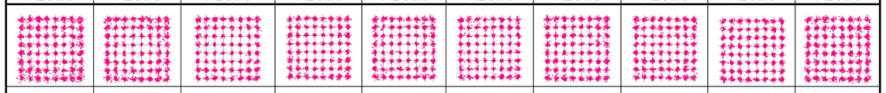									
EVM=6.7%	EVM=6.2%	EVM=5.1%	EVM=5.4%	EVM=5.4%	EVM=5.3%	EVM=5.7%	EVM=5.7%	EVM=5.5%	EVM=6.6%
10.8Gb/s	10.8Gb/s	10.8Gb/s	10.8Gb/s	10.8Gb/s	10.8Gb/s	10.8Gb/s	10.8Gb/s	10.8Gb/s	10.8Gb/s

Alexandre Siligaris, José Luis Gonzalez-Jimenez, & altri " A 125.5-157 GHz 8 dB NF and 16 dB of Gain D-band Low Noise Amplifier in CMOS SOI 45 nm," IMS 2020

HIGH-SPEED WIRELESS COMMUNICATIONS TRANSCEIVER - TRANSMITTER

Transmitter - 84.48 Gbps / 64QAM / 8 channels

- Transposition of V-band to D-band Transmitter
- 2 x Lanes of 4 x sub-channels have been implemented

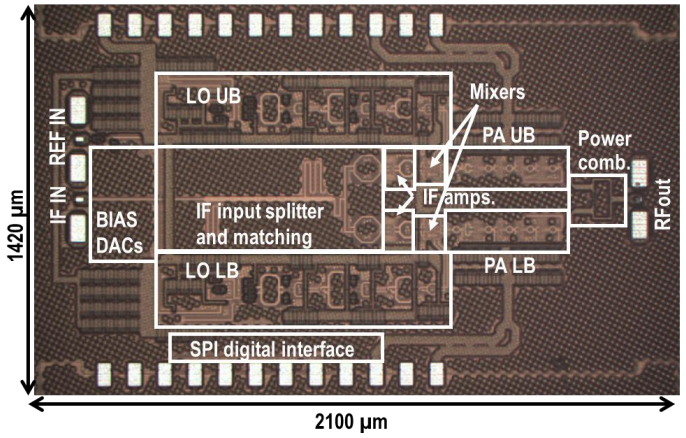

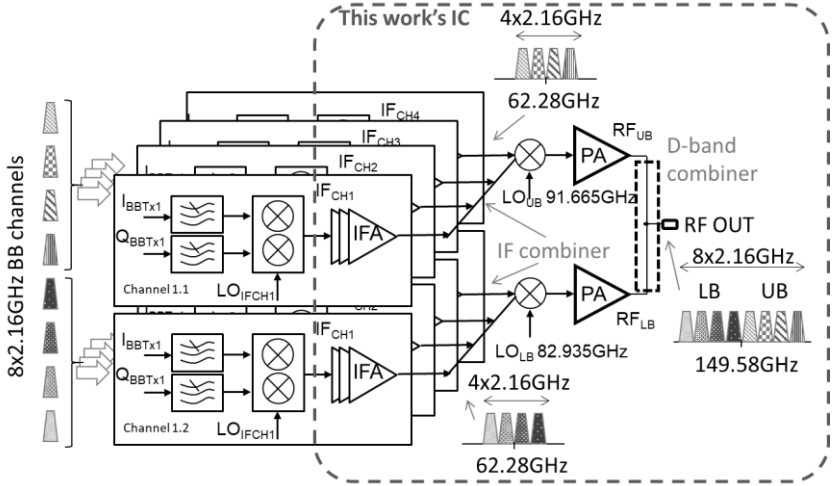

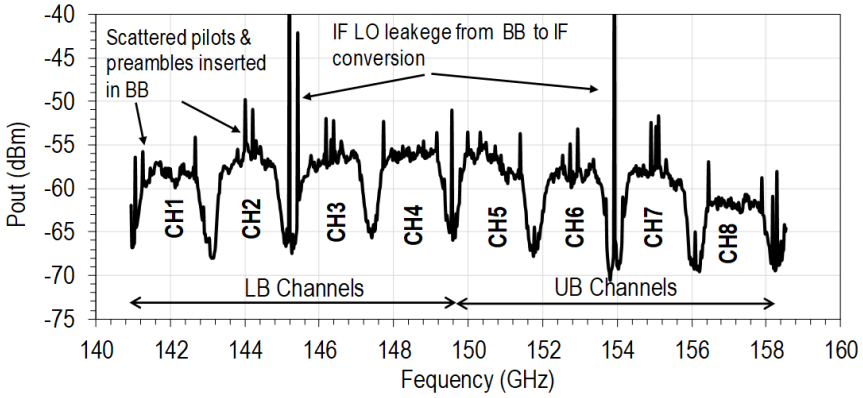

CH1	CH2	CH3	CH4	CH5	CH6	CH7	CH8
141.975GHz	144.135GHz	146.295GHz	148.455GHz	150.705GHz	152.865GHz	155.025GHz	157.185GHz
1.76Gbauds	1.76Gbauds	1.76Gbauds	1.76Gbauds	1.76Gbauds	1.76Gbauds	1.76Gbauds	1.76Gbauds
							
EVM=8.4%	EVM=7.6%	EVM=6.8%	EVM=8.5%	EVM=6.8%	EVM=6.5%	EVM=6.4%	EVM=10.4%
7.04Gb/s	7.04Gb/s	7.04Gb/s	7.04Gb/s	7.04Gb/s	7.04Gb/s	7.04Gb/s	7.04Gb/s
							
EVM=8.6%	EVM=7.4%	EVM=7.3%	EVM=8.4%	EVM=8.0%	EVM=6.2%	EVM=6.5%	EVM=9.5%
10.5Gb/s	10.5Gb/s	10.5Gb/s	10.5Gb/s	10.5Gb/s	10.5Gb/s	10.5Gb/s	10.5Gb/s

Alexandre Siligaris, José Luis Gonzalez-Jimenez, & altri "167-GHz and 155-GHz High Gain D-band Power Amplifiers in CMOS SOI 45-nm Technology", EuMIC 2020

CONFIDENTIAL

CONCLUSIONS ON THE D-BAND USE

- **Transceiver implementation**
  - Demonstration is done that a smart implementation can address 100 Gbps
  - Soon, publications about a full 16-channel of BW=2.16 GHz
  - High potential of ILO-based Frequency generation for low Phase Noise

  - But **still limited range** as CMOS does not produce high power/low Noise Figure at 140 GHz
  - Nevertheless, **OK for HD-LC^3** (High Datarate – Low Complexity/Cost/Consumption)

- **Next steps to improve performance / distance range**
  - Scalable approach :
    - keep a V-band transceiver, processing sub-channels in different lanes, **onto CMOS technology**
    - Address V-band to D-band with a **different technology, higher-end**

  - Option 1 :
    - Full-transceiver from D-BB to D-Band in CMOS
    - **Front-End Module** using **high-end technology** to improve output power/NF
  - Option 2 :
    - Consider **high directivity gain** for the antenna to compensate for CMOS limitations

ELECTRONICALLY-STEERABLE TRANSMIT-ARRAY

Electronically-steerable transmit-arrays

- **Spatial feeding mechanism** to limit the splitting loss
- Analog or hybrid beam-forming based architectures
  - Rather than digital beam-forming
- **PIN diodes on flat-lens array** to limit the complexity and phase-shifting loss

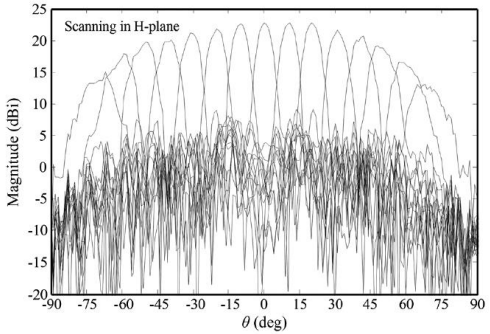

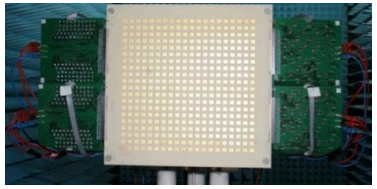

1-bit transmitarray

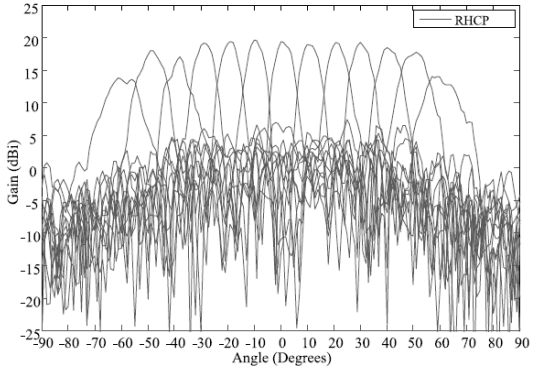

30 mm

Low-profile transmitarray (F/D = 0.27)

Fixed- and switched-beam transmitarrays

- **Spatial feeding mechanism** to limit the splitting loss
- PCN standard technology
- Multi-element focal system for beam-switching

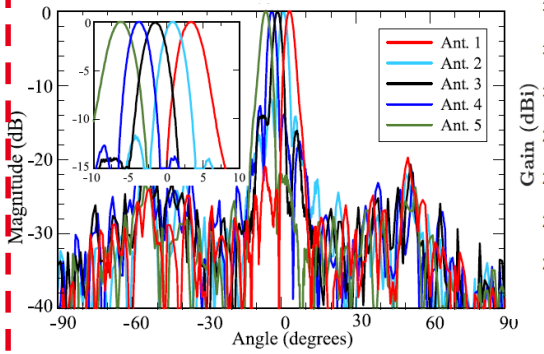

Switched-beam

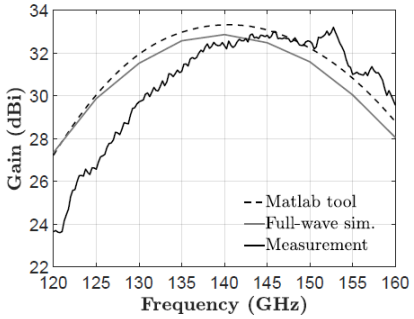

High-data-rate module

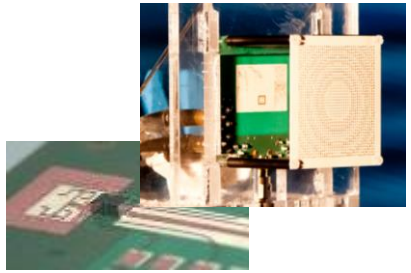

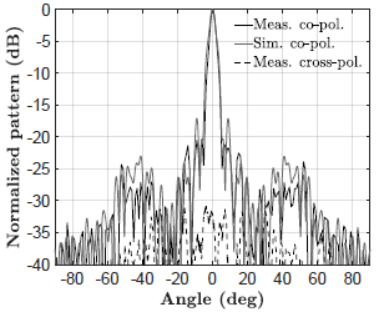

Monolithic TA

10 GHz 20 GHz 30 GHz 60 GHz 80 GHz … 140 GHz … 300 GHz

CONFIDENTIAL

PHY OPTIMIZATION FOR THROUGHPUT IMPROVEMENT

- **Increasing frequencies means increased Phase Noise**
  - Phase Noise improvements lead to higher power consumption
  - Consider modulation scheme for **more robustness**

- **Optimized Symbol Error Rate**
  - Rather than BER, **symbols are KPI**
  - Find a way to maximize the minimum distance – Symbol Error Rate
  - Polar-QAM with 2 parameters :
    - M : modulation order & Γ : number of circles
  - Maintain **SEP low ←→ BER still decreasing** with improved SNR

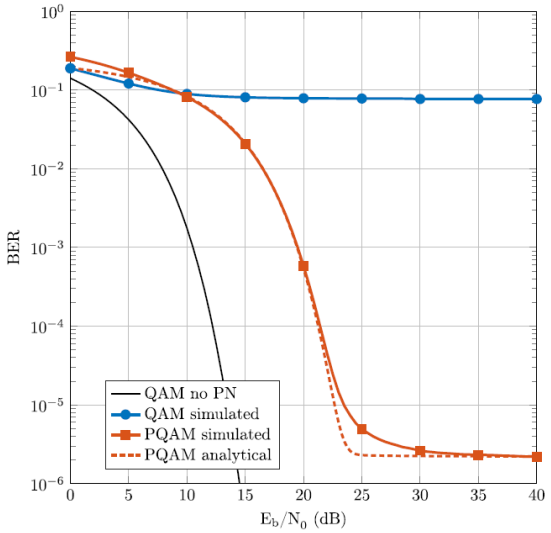

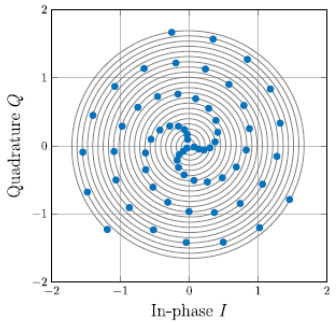

(c) Spiral, $E_b/N_0 = 30$ dB

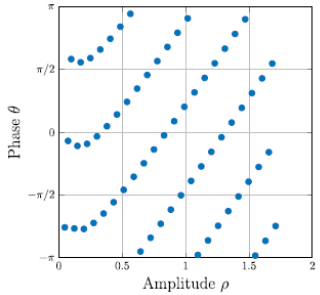

(g) Spiral, $E_b/N_0 = 30$ dB

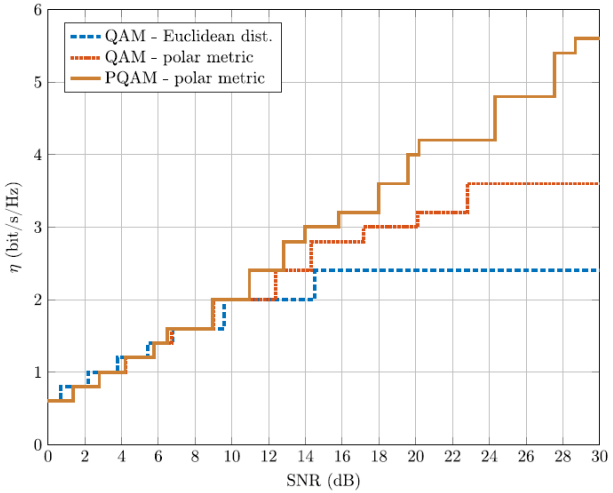

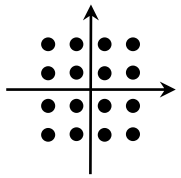

16-QAM

P-QAM

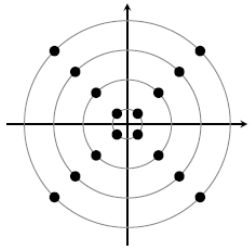

$M = 16 \quad \Gamma = 4$

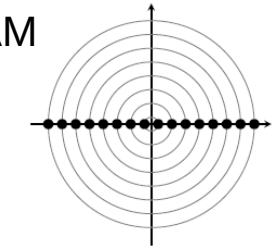

$M = 16 \quad \Gamma = 8$

Simon Bicaïs & Jean-Baptiste Doré, "Design of Digital Communications for Strong Phase Noise Channels", IEEE Open Journal on Vehicular Technology, Vol. 1 2020

INTEGRATION PERSPECTIVES

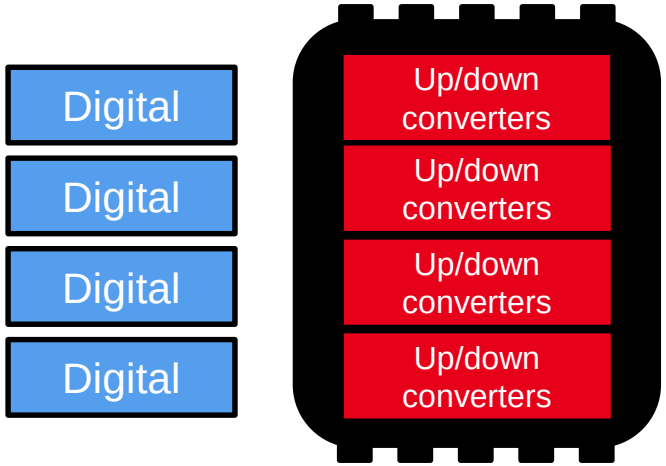

5G mmWave
20-60GHz
Digital beamforming

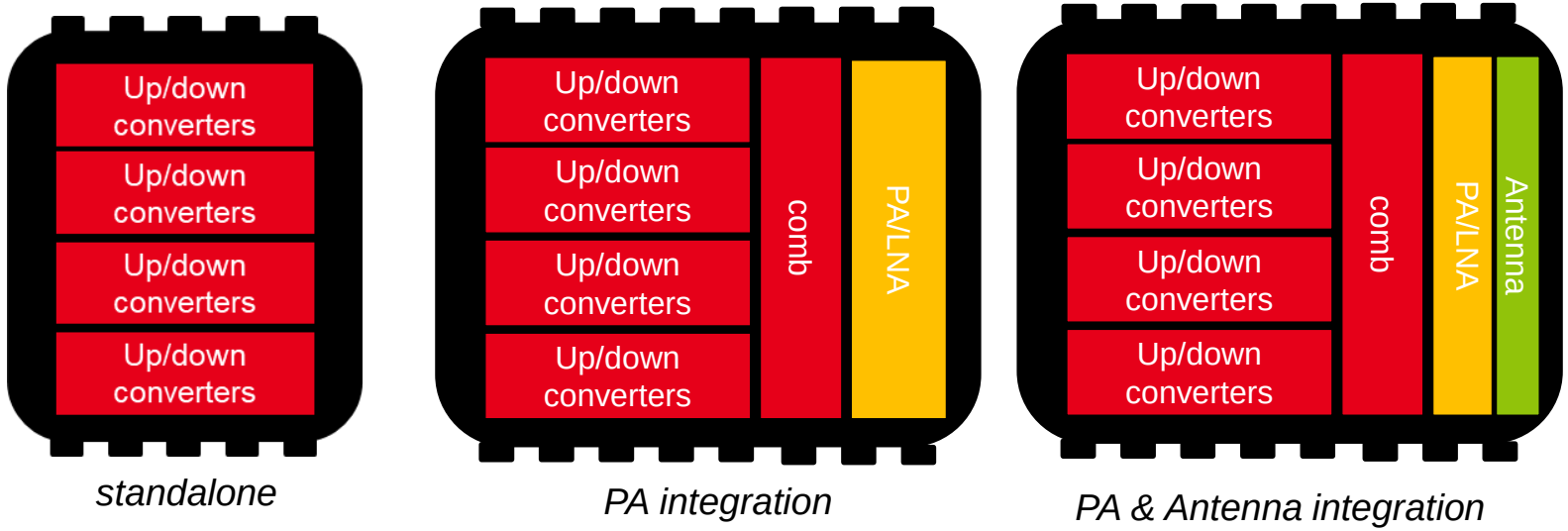

standalone *PA integration* *PA & Antenna integration*

Beyond 5G mmWave 140-300 GHz
Channel bonding

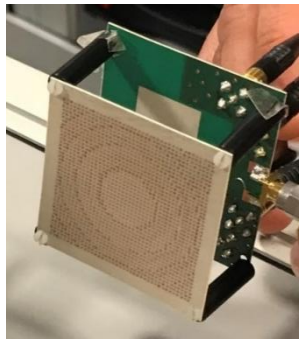

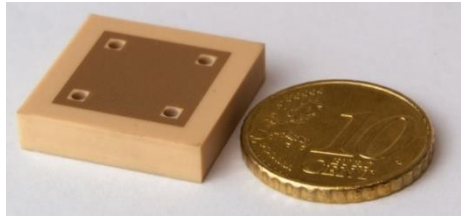

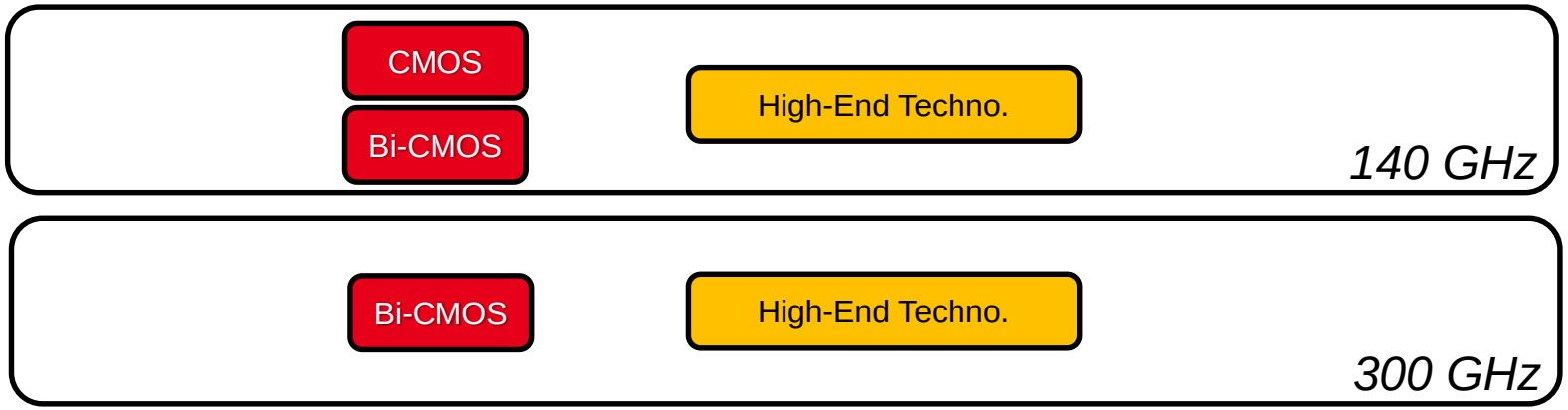

CONCLUSION ON INTEGRATION & TECHNOLOGY PERSPECTIVES

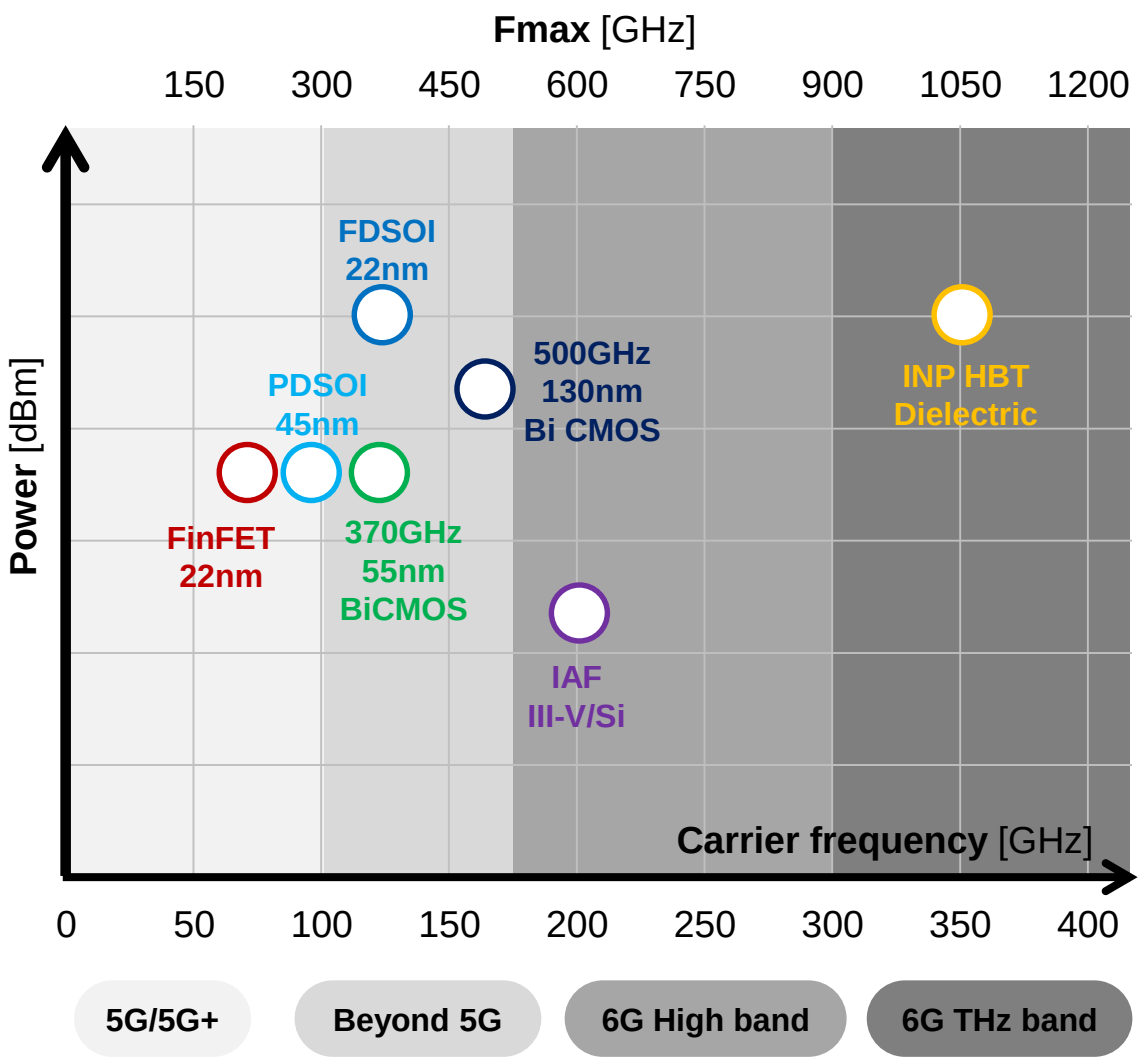

- **RF bands : room from 100 GHz to 300 GHz**
- **100Gbps full-transceivers made possible**
- **RF, mmW, Antenna co-design**
- **Next CMOS frontiers :**
  - New transistors, new materials
  - **Hybridation**

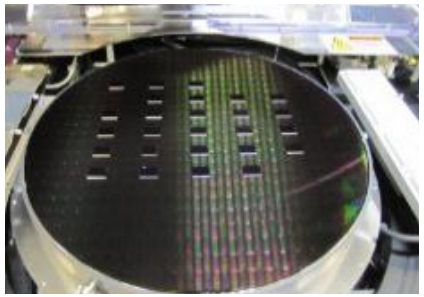

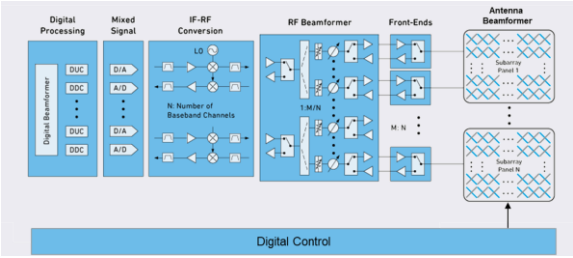

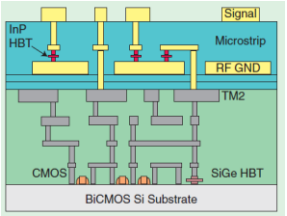

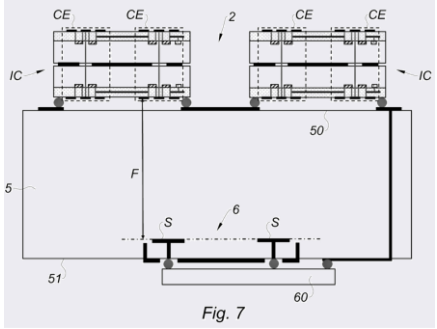

Fig. 7

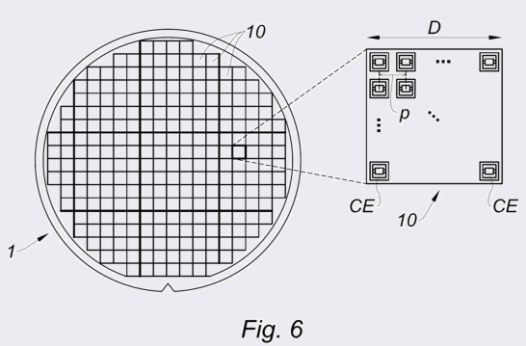

Fig. 6

CONFIDENTIAL

Leti, technology research institute
Commissariat à l'énergie atomique et aux énergies alternatives
Minatec Campus | 17 rue des Martyrs | 38054 Grenoble Cedex | France
www.leti.fr